Invercargill City Council

Code of Practice for Land Development and Subdivision Infrastructure Bylaw

2016

Invercargill
CITY COUNCIL

[THIS PAGE IS INTENTIONALLY LEFT BLANK

INVERCARGILL CITY COUNCIL

Bylaw 2016/1 – CODE OF PRACTICE FOR LAND DEVELOPMENT AND SUBDIVISION INFRASTRUCTURE

The following Bylaw was duly made by the Invercargill City Council by:

- Resolution of Section 155, Local Government Act 2002 matters on 14 March 2016.
- Resolution to consult on the Draft Bylaw in accordance with Section 82 of the Local Government Act 2002 on 14 March 2016.
- Resolution to adopt the Bylaw on 3 May 2016 and that it come into force on 1 July 2016.
- Public Notice in The Southland Times on 29 June 2016.

THE COMMON SEAL of the INVERCARGILL CITY COUNCIL was hereto affixed to the following Bylaw (Bylaw 2016/1 – Code of Practice for Land Development and Subdivision Infrastructure) at the offices of and pursuant to the resolution of the Invercargill City Council in the presence of:)

Mayor: .....

Chief Executive: .....

[THIS PAGE IS INTENTIONALLY LEFT BLANK]

CONTENTS

	SECTION	PAGE
1.	Short Title and Commencement	3
2.	Object of Bylaw	3
3.	General Powers not Affected	3
4.	Relationship with Other Legislation and Regulations	3
5.	Dispensing Power	3
6.	Offences and Penalties	4
7.	Introduction	4
8.	Section 1 – General Requirements and Procedures	5
9.	Section 2 – Earthworks and Geotechnical Requirements	6
10.	Section 3 – Roads	7
11.	Section 4 – Stormwater	23
12.	Section 5 – Waste Water	27
13.	Section 6 – Water Supply	31
14.	Section 7 – Landscape	36
15.	Section 8 – Network Utility Services	37
16.	Appendix A – Acceptable Pipe and Fitting Material	38
17.	Appendix B – Invercargill City Council Standard Details	46
18.	Appendix C – Field Testing of Pipelines	124
19.	Appendix D – Water Supply Disinfection Specification	125
20.	Appendix E – Typical Plan and Cross Section Figures from Table 3.2	126

[THIS PAGE IS INTENTIONALLY LEFT BLANK]

Invercargill City Council Bylaw 2016/1 – Code of Practice for Land Development and Subdivision Infrastructure (ICC Addendum to NZS 4404:2010).

Pursuant to the powers vested in it under Section 145 of the Local Government Act 2002, the Invercargill City Council makes this Bylaw.

1. SHORT TITLE AND COMMENCEMENT

1.1 This bylaw is Invercargill City Council Bylaw 2016/1 – Code of Practice for Land Development and Subdivision Infrastructure.

1.2 This bylaw comes into force on 1 July 2016.

2. OBJECT OF BYLAW

2.1 This bylaw enables the management of subdivision and land development works within the Invercargill District. It ensures that such works undertaken are done so to an acceptable means of compliance with Acts and Council requirements. The bylaw adopts the New Zealand Standard Land Development and Subdivision Infrastructure NZS 4404:2010 and amends it to suit the requirements of the Invercargill City Council.

NZS 4404:2010 is adopted as the Code however Clauses 9 through to 21 of this bylaw amend, extend or delete parts of the New Zealand Standard and take precedent over the New Zealand Standard.

3. GENERAL POWERS NOT AFFECTED

3.1 This Bylaw does not prevent or restrict Council from exercising any further powers, functions or duties in relation to subdivision and land development in accordance with the law.

4. RELATIONSHIP WITH OTHER LEGISLATION AND REGULATIONS

4.1 The scope does not include any building work as defined under the Building Act 2004. In any areas of overlap, the Building Act 2004 and the New Zealand Building Code take precedence.

4.2 While there is reference to the Invercargill City Council District Plan, the Bylaw does not cover all of the District Plan requirements and reference must be made to that document for a full understanding of the relevant provisions.

5. DISPENSING POWER

5.1 It shall be lawful for the Director of Works and Services to dispense with any of the following requirements of this Bylaw where, in the opinion of the Director of Works and Services, full compliance would needlessly cause harm, loss or inconvenience to any person or business without corresponding benefit to the community or where an acceptable alternate solution has been provided.

6. OFFENCES AND PENALTIES

6.1 Every person who breaches this Bylaw commits an offence and is liable on summary conviction to a fine not exceeding $20,000 pursuant to Section 242(4) of the Local Government Act 2002.

7. INTRODUCTION

7.1 The Invercargill City Council Bylaw 2016/1 - Code of Practice for Land Development and Subdivision Infrastructure (referred to as the Code) applies to all engineering, land development and subdivision infrastructure constructed on or under any urban or rural residential, commercial or industrial subdivision and land development within the Invercargill City Council area. It has the standing of an acceptable means of compliance with Acts and Council requirements governing subdivision and land development works within the City.

The scope does not include any building work as defined under the Building Act 2004.

This is primarily an engineering document and while there is reference to requirements of the District Plan, the Bylaw does not cover all of the District Plan requirements and reference must be made to that document for a full understanding of the relevant provisions.

This Code adopts the New Zealand Standard Land Development and Subdivision Infrastructure NZS 4404:2010 with amendments to suit the requirements of the Invercargill City Council. Clauses within this code have been reproduced from NZS 4404:2010 with the permission of Standards New Zealand under licence LN000993. NZS 4404:2010 can be purchased from Standards New Zealand at www.standards.co.nz or a copy is available for viewing upon request at the Council.

This document makes direct reference to the sections within that standard. If any part of NZS 4404:2010 is not modified by the following document, they are deemed to form part of the Invercargill City Council's Code of Practice for Land Development and Subdivision Infrastructure.

Where changes are made to clauses the existing wording will be faded and crossed out and the changes will be bold and underlined i.e. ~~existing~~ **example** and the clause will be read including the new wording.

Comments to help explain the document will be in italics i.e. *example*

Where the comment "***Not part of Code***" appears alongside a heading it means that that part of NZS 4404:2010 is not included in the Invercargill City Council's Code and will not be part of the Bylaw unless approval is given from the Council.

Section 18 of this Bylaw replaces NZS 4404 Drawing Set (Appendix B) with the Invercargill City Council Standard Detail drawing set.

The numbering shown in the left hand margin corresponds to the Bylaw contents page.

The numbering within the main content of the section of the Bylaw directly relates to the clause numbering from NZS4404:2010. The numbering from NZS4404:2010 has been included to allow ease of reference between the two documents.

NZS 4404:2010 is adopted as the Code however Clauses 9 through to 21 amend, extend or delete parts of the New Zealand Standard and take precedent over the New Zealand Standard.

8. SECTION 1 – GENERAL REQUIREMENTS AND PROCEDURES

1.1 Scope – *No change*

1.2 Interpretation – *No change*

1.3 Context – *No change*

1.4 Low impact design – *No change*

1.5 Climate change – *No change*

1.6 Urban design protocol – *No change*

1.7 Requirements for design and construction – *No change*

1.8 Approval of design and construction – *Amend clauses as below*

1.8.1 DOCUMENTS TO BE SUBMITTED FOR DESIGN APPROVAL

1.8.1.1
Prior to, or as a condition of, granting a resource consent for subdivision or development of land, or as otherwise required by a district or regional plan, or as otherwise considered necessary by the LA when considering applications to construct infrastructure, the LA ~~may~~ **will** require documents to be submitted including the following:

Remainder of clause no change

1.8.1.2 Composition of drawings
Requirements (a) – (c) no change

(d) A north point and level datum, the scale or scales used, the date of preparation and the date of any amendments, the designer's name and contact details, and a unique number or identifier. **All reduced level information shall be in metres in terms of the Invercargill City Council Datum and shall be referred to a permanent bench mark identified on the plans. The ICC Datum of 100 metres below mean sea level (Bluff Vertical Datum 1955/Dunedin-Bluff Vertical Datum 1960).**

1.8.2.5 Recording of infrastructure – As-built information
~~The LA may require the design drawings to be in a certain format~~ **The LA will require the as-built drawings to be supplied as a hard copy as well as a CAD electronic format**, suitable for later addition of as-built information and inclusion in the LA asset map base. ~~In particular, electronic plans might be required.~~

1.8.6 Supervision of construction
Add to start of clause

A 'developer's professional adviser' or 'independent qualified person (IQP)' shall be appointed for developments that create more than

three new allotments or have the installation of infrastructure that is to be vested with the Council.

First paragraph no change

The LA ~~may~~ **will** require completion certification for construction and supervision be submitted to it on completion. Such certification ~~may~~ **will** be required from the contractors undertaking the construction, ~~or~~ **and** the developer's professional advisor (if any). The certificates shall be in the form given in Schedules 1B and 1C.

1.8.10 Completion documentation

First paragraph and requirement (a) no change

(b) As-built plans of all infrastructure showing the information set out in Schedule 1D. As-built plans ~~may be required as electronic data where a standard data format has been agreed between the LA and the developer~~ **will be required in hard copy and in a CAD electronic format, the electronic data is to use the New Zealand Transverse Mercator (NZTM) co-ordinate system and to the ICC Datum of 100 metres below mean sea level (Bluff Vertical Datum 1955/Dunedin-Bluff Vertical Datum 1960).**

Requirements (c) – (g) no change

1.9 Bonds and charges – *Amend clauses as below*

1.9.1 Uncompleted works

1.9.1.3

The amount of the bond shall be **150% of** the ~~estimated~~ value of the uncompleted work **or a value agreeable to the TA** plus a margin to cover additional costs estimated to be incurred by the TA in the event of default.

SCHEDULE 1A – No change

SCHEDULE 1B – No change

SCHEDULE 1C – No change

SCHEDULE 1D – No change

9. SECTION 2 – EARTHWORKS AND GEOTECHNICAL REQUIREMENTS

2.1 Scope – No change

2.2 General – No change

2.3 Design – No change

2.4 Approval of Proposed Works – No change

2.5 Construction – No Change – No change

2.6 Final Documentation – Amend clauses as below

2.6.2 As-built drawings for earthworks and subsoil drains

Where earthworks have occurred, an as-built plan shall be prepared showing finished contours. The plans shall also show original contours where earthworks have occurred to illustrate the extent and depth of cuts and fills. Alternative methods of representing earthwork depths may be acceptable including plans showing lines joining all points of equal depth of cut and fill at appropriate vertical intervals. The as-built plans shall also record the position, type and size of all subsoil drains and their outlets **including existing drains found during excavation**, and show any areas of fill or natural ground which the geo-professional considers do not comply with this Standard or areas where the standards have been varied from the original construction specification.

10. SECTION 3 – ROADS

3.1 Scope – ***No change***

3.2 General – ***Amend clauses as below***

C3.2.4.2

The following is to be added to the end of the comment.

Invercargill City Council uses the One Network Road Classification (ONRC) for the road hierarchy in its RAMM database: Arterial, Primary and Secondary collector, access roads, low volume access road.

3.3 Design – ***Amend clauses as below***

3.3.1 Design requirements

First paragraph no change

Alternative carriageway widths may be adopted to suit particular design considerations. These shall be subject to specific design consideration and approval by the TA. Such cross sections may include landscaped features, painted median facilities, or variations to parking provision. Carriageways ~~should avoid widths of 5.7 m to 7.2 m and 7.5 m to 9.0 m where these widths may cause confusion between movement and parking functions.~~ **with a width of 6.0 m will require parking bays on at least one side of the carriageway for part or all of the road length.**

Remainder of clause no change.

C3.3.1

First paragraph no change

There are three carriageway types. These are

(a) A width ~~in the range 5.5 m – 5.7 m~~ **of 6.0 m** providing for the ability to park on one side of the road and one through lane, or alternatively two through lanes. This is often not defined at the engineering stage and is instead left to the road users to choose. This type of road is provided for in the standard and is typically appropriate for shorter streets of up to approximately 250 m, to assist with achieving a slower operating speed. **Parking bays will be required with this width.**

Requirements (b) & (c) no change

3.3.2.1 Design parameters
Add to end of clause

If the Local Authority considers there is potential for expansion through the subdivision then the appropriate standard shall be used to cater for this potential.

Table 3.2 - Road design standards

PLACE CONTEXT			DESIGN ENVIRONMENT				LINK CONTEXT						FIGURE NUMBER
Area	**Land use**	**Local attributes**	**Locality served**	**Target operating speed** (km/h)	**Min. road width** (m)	**Max. grade**	**Pedestrians**	**Passing, parking, loading, and shoulder**	**Cyclists**	**Movement lane (excluding shoulder)**	**Classification**	**TYPICAL PLAN AND CROSS SECTION**	
Notes	See 3.2.4, table 3.1 & 3.3.1.6	See table 3.1	See table 3.1	See 3.3.5	See 1.2.2, 3.3.1.9, & 3.4.16		See 3.3.11	See 3.3.6 & 3.3.1.4	See 3.3.1.5, 3.3.7, & 3.3.11.2	See 1.2.2, 3.3.1.1, 3.3.1.2, 3.3.1.3, 3.3.1.10, 3.3.11.3	See 3.2.4.2 & 3.3.16 (Typical max, volumes)	SEE APPENDIX E FOR LARGER VERSION OF FIGURES	
Rural (3.3.1.7, 3.3.1.8, & 3.3.1.9)	Live and Play	Access to lifestyle or clustered housing	1 to 6 du	20	6	20%	Shared (on shoulder and berm)	Allow for passing up to every 50 m, total shoulder 0.5 m, sealed	Shared (in movement lane)	~~2.5~~ **3.0**	Lane (this would normally be a private road or private way **or Right of Way not vested as road**)		E1
	Live and Play	Access to lifestyle or clustered housing	1 to 20 du	30	9	16%	Shared (on shoulder and berm)	Total shoulder 0.5 m, sealed	Shared (in movement lane)	~~5.5 - 5.7~~ **6.0**	Lane (~200 vpd)		E2
	Live and Play	Access to housing	1 to 150 du	70	15	12.50%	Shared (on shoulder and berm)	Total shoulder 1.0 m, sealed shoulder 0.5 m	Shared (in movement lane)	~~5.5 - 5.7~~ **6.0**	Local road (~1000 vpd)		E3
	Shop and trade	Side or rear service access	Up to 100 m in length between streets, 1 to 20 lots	10	6	16%	Shared (in movement lane)	Allow for passing up to every 50 m. Kerbed edge or total shoulder 0.5 m, sealed	Shared (in movement lane)	2.75 - 3.00	Lane (~200 vpd) (not vested as road)		E4

PLACE CONTEXT			DESIGN ENVIRONMENT				LINK CONTEXT						
Area	**Land use**	**Local attributes**	**Locality served**	**Target operating speed** (km/h)	**Min. road width** (m)	**Max. grade**	**Pedestrians**	**Passing, parking, loading, and shoulder**	**Cyclists**	**Movement lane (excluding shoulder)**	**Classification**	**TYPICAL PLAN AND CROSS SECTION**	**FIGURE NUMBER**
Notes	See 3.2.4, table 3.1 & 3.3.1.6	See table 3.1	See table 3.1	See 3.3.5	See 1.2.2, 3.3.1.9, & 3.4.16		See 3.3.11	See 3.3.6 & 3.3.1.4	See 3.3.1.5, 3.3.7, & 3.3.11.2	See 1.2.2, 3.3.1.1, 3.3.1.2, 3.3.1.3, 3.3.1.10, 3.3.11.3	See 3.2.4.2 & 3.3.16 (Typical max, volumes)	SEE APPENDIX E FOR LARGER VERSION OF FIGURES	
Rural (3.3.1.7, 3.3.1.8, & 3.3.1.9)	Shop and trade	Access to trade	Rural village shops	40	15	10%	1.5 m each side	Parking and loading may occur in the movement lane or be separate and recessed. See 3.3.6 Kerbed edge or total shoulder 1.0 m, sealed shoulder 0.5 m	Shared (in movement lane)	~~5.5 – 5.7~~ **6.0**	Local road (~1,000 vpd)		E5
	Make and move	Primary frieght access	Rural activities	up to 100	20	10%	1.5 m each side	Total shoulder 1.0 m, sealed shoulder 0.5 m	On sealed shoulder where it is a local authority defined cycle route	~~5.5 – 5.7~~ **6.0**	Local road (~1,000 vpd)		E6
	Make and move	Access to office and education	1 to 200 lots	up to 60	20	10%	1.5 m **concrete or 1.8 m asphalt** each side	Parking and loading may occur in the movement lane or be separate and recessed. See 3.3.6. Total shoulder 1.0 m, sealed shoulder 0.5 m	On sealed shoulder where it is a local authority defined cycle route	~~5.5 – 5.7~~ **6.0**	Local road (~1,000 vpd)		E7
	All other situations (where not specified elsewhere)	All (serving lands uses not specificed elsewhere in this table)		up to 100	20	10%	Separate from the carriageway, 1.5 m **concrete or 1.8 m asphalt** each side	Total shoulder 1.5 m, sealed shoulder 1.0 m	On sealed shoulder where it is a local authority defined cycle route	~~5.5 – 5.7~~**7.2**	Connector/collector (~2,500 vpd)		E8

PLACE CONTEXT			DESIGN ENVIRONMENT				LINK CONTEXT					TYPICAL PLAN AND CROSS SECTION	FIGURE NUMBER
Area	**Land use**	**Local attributes**	**Locality served**	**Target operating speed** (km/h)	**Min. road width** (m)	**Max. grade**	**Pedestrians**	**Passing, parking, loading, and shoulder**	**Cyclists**	**Movement lane (excluding shoulder)**	**Classification**		
Notes	See 3.2.4, table 3.1 & 3.3.1.6	See table 3.1	See table 3.1	See 3.3.5	See 1.2.2, 3.3.1.9, & 3.4.16		See 3.3.11	See 3.3.6 & 3.3.1.4	See 3.3.1.5, 3.3.7, & 3.3.11.2	See 1.2.2, 3.3.1.1, 3.3.1.2, 3.3.1.3, 3.3.1.10, 3.3.11.3	See 3.2.4.2 & 3.3.16 (Typical max, volumes)	SEE APPENDIX E FOR LARGER VERSION OF FIGURES	
Suburban	Live and Play	Access to houses/townhouses	1 to 3 du or 1 to 6 du	10	3.5 m for up to 3 du or 4.5 m for up to 6 du	20%	Shared (in movement lane)	Allow for passing up to every 50 m	Shared (in movement lane)	~~2.5~~ **3.0**	Lane (this would normally be a private road or private way **or Right of Way not vested as road**)		E9
	Live and Play	Side or rear service access **(Not primary access)**	Up to 100 m in length between streets, 1 to 20 lots	10	9	16%	Shared (in movement lane)	Allow for passing up to every 50 m	Shared (in movement lane)	~~5.5 - 5.7~~ **Sealed 6.0**	Lane (~200 vpd)		E10
	Live and Play	Access to houses/townhouses	1 to 20 du	20	9	16.00%	Shared (in movement lane) **1.5 m concrete or 1.8 m AC on one side**	Shared (in movement lane)	Shared (in movement lane)	~~5.5 - 5.7~~ **6.0**	Lane (~200 vpd)		E11
	Live and Play	Primary access to housing	1 to 200 du	40	20	12.50%	1.5 m **concrete or 1.8 m asphalt** on one side or ~~1.5 m~~ each side where more than 20 du or more than 100 m in length	Shared parking in the movement lane up to 100 du, separate parking required over 100 du	Shared (in movement lane) unless on proposed or current route where allocated rates required.	~~5.5 - 5.7~~ **7.2**	Local road (~2,000 vpd)		E12

PLACE CONTEXT			DESIGN ENVIRONMENT				LINK CONTEXT						
Area	**Land use**	**Local attributes**	**Locality served**	**Target operating speed** (km/h)	**Min. road width** (m)	**Max. grade**	**Pedestrians**	**Passing, parking, loading, and shoulder**	**Cyclists**	**Movement lane (excluding shoulder)**	**Classification**	**TYPICAL PLAN AND CROSS SECTION**	**FIGURE NUMBER**
Notes	See 3.2.4, table 3.1 & 3.3.1.6	See table 3.1	See table 3.1	See 3.3.5	See 1.2.2, 3.3.1.9, & 3.4.16		See 3.3.11	See 3.3.6 & 3.3.1.4	See 3.3.1.5, 3.3.7, & 3.3.11.2	See 1.2.2, 3.3.1.1, 3.3.1.2, 3.3.1.3, 3.3.1.10, 3.3.11.3	See 3.2.4.2 & 3.3.16 (Typical max, volumes)	SEE APPENDIX E FOR LARGER VERSION OF FIGURES	
Suburban	Live and Play	Primary access to housing	Up to 800 du	50	20	10.00%	~~2.0 m each side~~ **1.5 m concrete or 1.8 m asphalt each side**	Parking is separate and recessed. See 3.3.6 Public transport is likely (see clause 3.3.1.4, 3.3.1.5)	Separate provisiion where local authority defined cycle route	2x4.2	Connector/collector (~8,000 vpd)		E13
	Shop and trade, work and learn	Side or rear service access	Suburban village, access to office and education, 1 - 20 lots	10	9	10%	Shared (in movement lane)	Recessed loading bays in accordance with 3.3.6	Shared (in movement lane)	~~3.5~~ **6.0 sealed**	Lane (~200 vpd)		E14
	Shop and trade, work and learn	Access to trade, office and education	Suburban village 1 - 200 lots	40	18	10%	3.0 m each side	Parking and loading bays both sides may be in the movement lane or recessed. See 3.3.6	Shared (in movement lane)	~~5.5 - 5.7~~ **6.0**	Local road (~2,000 vpd)		E15
	Make and move	Side or rear access	Industrial area	10	11	10%	~~Separate footpath one side~~	~~Loading bays shall be separate and recessed. See 3.3.6~~	Shared (in movement lane)	~~3.5~~ **6.0**	Lane (~200 vpd)		E16

PLACE CONTEXT			DESIGN ENVIRONMENT				LINK CONTEXT						
Area	**Land use**	**Local attributes**	**Locality served**	**Target operating speed** (km/h)	**Min. road width** (m)	**Max. grade**	**Pedestrians**	**Passing, parking, loading, and shoulder**	**Cyclists**	**Movement lane (excluding shoulder)**	**Classification**	**TYPICAL PLAN AND CROSS SECTION**	**FIGURE NUMBER**
Notes	See 3.2.4, table 3.1 & 3.3.1.6	See table 3.1	See table 3.1	See 3.3.5	See 1.2.2, 3.3.1.9, & 3.4.16		See 3.3.11	See 3.3.6 & 3.3.1.4	See 3.3.1.5, 3.3.7, & 3.3.11.2	See 1.2.2, 3.3.1.1, 3.3.1.2, 3.3.1.3, 3.3.1.10, 3.3.11.3	See 3.2.4.2 & 3.3.16 (Typical max, volumes)	SEE APPENDIX E FOR LARGER VERSION OF FIGURES	
Suburban	Make and move	Primary freight access	Industrial area	40	18	10%	1.5 m **concrete or 1.8 m asphalt** each side	Parking and loading bays both sides ~~may be in the movement lane or~~ recessed. See 3.3.6	Shared (in movement lane)	2x4.2	Local road (~2,000 vpd)		E17
	Shop and trade, work and learn, make and move	All, roads serving multi-purpose areas involving most or all of the indicated land uses, not specified elsewhere in this table	All, or combinations of these land uses	50	~~23~~ **20**	10%	~~2.5 m each side, 3.5 m each side~~ **1.8 m each side or full frontage** for shop and trade, work and learn	Parking is separate and recessed. See 3.3.6 Public transport is likely (see clause 3.3.1.4, 3.3.1.5)	Separate provisiion where local authority defined cycle route	2x4.2	Connector/collector (~8,000 vpd)		E18
Urban	Live and Play	Access to lifestyle or clustered housing	1 to 3 du or 1 to 6 du	10	3.5 m for up to 3 du or 4.5 m for up to 6 du	20%	Shared (in movement lane)	Allow for passing up to every 50 m	Shared (in movement lane)	~~2.7~~ 3.0	Lane (this would normally be a private road or private way **or Right of Way not vested as road**)		E19
	Live and Play	Side or rear service access **(Not primary access)**	1 to 20 du	10	9	16%	Shared (in movement lane)	Parking is required and shall be separate and reccessed	Shared (in movement lane)	~~2.75 - 3.00~~ **5.0**	Lane (~200 vpd) **Right of Way not vested as road**		E20

PLACE CONTEXT			DESIGN ENVIRONMENT				LINK CONTEXT						
Area	**Land use**	**Local attributes**	**Locality served**	**Target operating speed** (km/h)	**Min. road width** (m)	**Max. grade**	**Pedestrians**	**Passing, parking, loading, and shoulder**	**Cyclists**	**Movement lane (excluding shoulder)**	**Classification**	**TYPICAL PLAN AND CROSS SECTION**	**FIGURE NUMBER**
Notes	See 3.2.4, table 3.1 & 3.3.1.6	See table 3.1	See table 3.1	See 3.3.5	See 1.2.2, 3.3.1.9, & 3.4.16		See 3.3.11	See 3.3.6 & 3.3.1.4	See 3.3.1.5, 3.3.7, & 3.3.11.2	See 1.2.2, 3.3.1.1, 3.3.1.2, 3.3.1.3, 3.3.1.10, 3.3.11.3	See 3.2.4.2 & 3.3.16 (Typical max, volumes)	SEE APPENDIX E FOR LARGER VERSION OF FIGURES	
Urban	Live and Play	Access to Houses / townhouses	1 to 20 du	20	9	16.00%	1.5 m concrete or 1.8 m asphalt on one side)	Shared (in movement lane)	Shared (in movement lane)	~~5.5 - 5.7~~ **6.0**	Lane (~200 vpd) **Right of Way not vested as road**		E21
	Live and Play	Primary access to housing	1 to 200 du	30	15	12.50%	1.5 m **concrete or 1.8 m asphalt** on one side or ~~1.5 m~~ each side where more than 20 du or more than 100 m in length	Parking may occur in the movement lane or be separate and recessed. See 3.3.6	Shared (in movement lane)	~~5.5 - 5.7~~ 2 x 4.2	Local road (~2,000 vpd)		E22
	Live and Play	All other land use activity types within this area type not specified elsewhere in this table.	All	50	20	10.00%	~~2.0 m each side~~ **1.5 m concrete or 1.8 m asphalt each side**	Parking separate and recessed. See 3.3.6 Public transport is likely (see clause 3.3.1.4, 3.3.1.5)	Separate provisiion where local authority defined cycle route	2x4.2	Connector/collector (~8,000 vpd)		E23
	Shop and trade	Side or rear service access	1 to 20 lots	10	6	16%	Shared (in movement lane)	Loading bays shall be recessed	Shared (in movement lane)	~~2.75-3.00~~ **6.0**	Lane (~200 vpd)		E24

PLACE CONTEXT			DESIGN ENVIRONMENT				LINK CONTEXT						
Area	**Land use**	**Local attributes**	**Locality served**	**Target operating speed** (km/h)	**Min. road width** (m)	**Max. grade**	**Pedestrians**	**Passing, parking, loading, and shoulder**	**Cyclists**	**Movement lane (excluding shoulder)**	**Classification**	**TYPICAL PLAN AND CROSS SECTION**	**FIGURE NUMBER**
Notes	See 3.2.4, table 3.1 & 3.3.1.6	See table 3.1	See table 3.1	See 3.3.5	See 1.2.2, 3.3.1.9, & 3.4.16		See 3.3.11	See 3.3.6 & 3.3.1.4	See 3.3.1.5, 3.3.7, & 3.3.11.2	See 1.2.2, 3.3.1.1, 3.3.1.2, 3.3.1.3, 3.3.1.10, 3.3.11.3	See 3.2.4.2 & 3.3.16 (Typical max, volumes)	SEE APPENDIX E FOR LARGER VERSION OF FIGURES	
Urban	Shop and trade	Access to lots or shop or trade units	1 to 20 lots	10	15	12%	1,8 m one side	Parking may occur separate and recessed. See 3.3.6	Shared (in movement lane)	~~2.75~~ ~~3.00~~ **6.0**	Lane (~200 vpd)		E25
	Shop and trade	Primary access to trade	1 to 200 lots	30	20	10%	~~3.5 m each side~~ **1.8 m each side or full frontage for shop and trade, work and learn**	Parking bays and loading may occur in the movement lane or be separate and recessed. See 3.3.6	Shared (in movement lane)	~~5.5 - 5.7~~ 2 x 4.2	Local road (~2,000 vpd)		E26
	Work and learn	Side or rear access	1 to 20 lots	10	9	16%	Shared (in movement lane)	Parking and loading bays shall be separate and recessed. See 3.3.6	Shared (in movement lane)	~~2.75 - 3.00~~ **6.0**	Lane (~200 vpd)		E27
	Work and learn	Access to lots or work or learn activities	1 to 20 lots	10	11	12%	1.8 m on one side	Parking and loading bays shall be separate and recessed. See 3.3.6	Shared (in movement lane)	~~2.75 - 3.00~~ **6.0**	Lane (~200 vpd)		E28

PLACE CONTEXT			DESIGN ENVIRONMENT				LINK CONTEXT						
Area	**Land use**	**Local attributes**	**Locality served**	**Target operating speed** (km/h)	**Min. road width** (m)	**Max. grade**	**Pedestrians**	**Passing, parking, loading, and shoulder**	**Cyclists**	**Movement lane (excluding shoulder)**	**Classification**	**TYPICAL PLAN AND CROSS SECTION**	**FIGURE NUMBER**
Notes	See 3.2.4, table 3.1 & 3.3.1.6	See table 3.1	See table 3.1	See 3.3.5	See 1.2.2, 3.3.1.9, & 3.4.16		See 3.3.11	See 3.3.6 & 3.3.1.4	See 3.3.1.5, 3.3.7, & 3.3.11.2	See 1.2.2, 3.3.1.1, 3.3.1.2, 3.3.1.3, 3.3.1.10, 3.3.11.3	See 3.2.4.2 & 3.3.16 (Typical max, volumes)	SEE APPENDIX E FOR LARGER VERSION OF FIGURES	
Urban	Work and learn	Primary access to office and education	1 to 200 lots	30	20	10%	~~3.5 m each side~~ **1.8 m each side or full frontage for shop and trade, work and learn**	Parking and loading bays ~~may occur in the movement lane or~~ **to** be separate and recessed. See 3.3.6	Shared (in movement lane)	~~5.5 - 5.7~~ 2 x 4.2	Local road (~2,000 vpd)		E29
	Mixed use	Multiple user access	1 to 200 lots	30	20	10%	~~3.5 m each side~~ **1.8 m each side or full frontage for shop and trade, work and learn**	Parking and loading bays ~~may occur in the movement lane or~~ **to** be separate and recessed. See 3.3.6	Shared (in movement lane)	~~5.5 - 5.7~~ 2 x 4.2	Local road (~2,000 vpd)		E30
	Mixed use	Neighbourhood centres (and all other areas serving multiple land uses not listed elsewhere in this table)	200 to 800 lots	50	~~23~~ **20**	10%	2.5 m each side	Parking is preferred separate and recessed. See 3.3.6 Public transport is likely (see 3.3.1.4, 3.3.1.5)	Separate provision where local authority defined cycle route.	2 x 4.2	Connector/collector (~8,000 vpd)		E31
Centre	Mixed use	Side or rear service access	1 to 20 lots	10	9	16%	1.8 m on one side	Parking and loading bays (shared in movement lane). See 3.3.6	Shared (in movement lane)	~~5.7~~ **6.0**	Lane (~200 vpd)		E32

PLACE CONTEXT			DESIGN ENVIRONMENT				LINK CONTEXT					TYPICAL PLAN AND CROSS SECTION	FIGURE NUMBER
Area	**Land use**	**Local attributes**	**Locality served**	**Target operating speed** (km/h)	**Min. road width** (m)	**Max. grade**	**Pedestrians**	**Passing, parking, loading, and shoulder**	**Cyclists**	**Movement lane (excluding shoulder)**	**Classification**		
Notes	See 3.2.4, table 3.1 & 3.3.1.6	See table 3.1	See table 3.1	See 3.3.5	See 1.2.2, 3.3.1.9, & 3.4.16		See 3.3.11	See 3.3.6 & 3.3.1.4	See 3.3.1.5, 3.3.7, & 3.3.11.2	See 1.2.2, 3.3.1.1, 3.3.1.2, 3.3.1.3, 3.3.1.10, 3.3.11.3	See 3.2.4.2 & 3.3.16 (Typical max, volumes)	SEE APPENDIX E FOR LARGER VERSION OF FIGURES	
Centre	Mixed use	Access to lots or mixed use activities	1 to 20 lots	20	11	12%	1.8 m on one side	Parking and loading bays may occur in movement lane or be separate and recessed. See 3.3.6	Shared (in movement lane)	~~5.5 - 5.7~~ **6.0**	Lane (~200 vpd)		E33
	Mixed use	Primary access and local movement	1 to 200 lots	30	20	10%	2.5 m each side	Parking and loading bays ~~may occur in movement lane or~~ **to** be separate and recessed. See 3.3.6	Shared (in movement lane)	~~5.5 - 5.7~~ **6.0**	Local road (~2,000 vpd)		E34
	Mixed use	Shared spaces, accessway, mall, and community reserve	Varies, specific design required	10	11	None if steps	1.8 m on one side	Activity space	Shared (in movement lane)	~~2.75 - 3.00~~ **6.0** vehicle movement space, total by design	Local road (~2,000 vpd)		E35
	Mixed use	Urban street	200 to 800 lots	40	~~23~~ **20**	10%	4.0 m each side	Parking and or loading is separate and recessed. See 3.3.6 Public transport is likely (see 3.3.1.4, 3.3.1.5)	Where local authority defined cycle route	2 x 4.2	Connector/collector (~8,000 vpd)		E36

3.3.6 Parking, Passing and Loading

Paragraph 1 & 2 no change

Acceptable and alternative on-street car park and loading dimensions should be taken from AS 2890.5 and/or Austroads guides. **Off-street car park and loading dimensions should be taken from the New Zealand Building Code.**

Remainder of clause no change

3.3.11 Footpaths, Accessways, Cycle Paths, and Berms

The following comment is to be added to the end of the clause.

C3.3.11

During the design of the subdivision consideration is needed to be given to not locating the footpath adjacent to the kerb. By having a berm between the kerb and the footpath it allows an area for refuse and recycling bins to be placed without the bins creating obstructions on the footpath for pedestrians.

3.3.11.1 Footpaths and accessways

Footpaths shall be a minimum of 1.5 m wide **in concrete or 1.8 m wide in asphalt,** surfaced over their full width. The crossfall should be no greater than 2% **and approval is required by the TA to vary this. No crossfall shall exceed 4%.** Wider footpaths or areas of local widening will often be required by the TA where higher use or other needs dictate such widening. **If a footpath is shared as a cycle path width shall be as per 3.3.11.2**

Remainder of clause no change

3.3.11.2 Cycle paths

Add to end of clause

Cycle paths on the road carriageway shall be 1.8 m wide. Where cycle paths are shared with footpaths they shall be a minimum of 2.4 m wide and signed appropriately.

3.3.12 Traffic Signs, Marking, and Road Furniture

The following is to be added to the end of the clause.

Also refer to Section 18 Appendix B – In City Standard Details ICC Standard Details for the Council's requirements on signs, markings and road furniture. Any changes from the details must be approved by the TA.

3.3.14 Road Lighting

All road lighting shall be designed and installed in compliance with the recommendations of AS/NZS 1158, and **New Zealand Transport Agency Specification M30**, Austroads guides**, ICC's rural lighting policy or other** ~~or~~ guidelines adopted by the TA at that time.

3.3.15 Bridges and Culverts

First paragraph no change

Particular features to be considered/covered include:

(a) Widths/lengths:
All bridges and culverts shall be designed with a width to accommodate movement lane, cycle, and pedestrian needs of the road (see table 3.2) **and extend beyond the clear zone of the road as defined by the NZTA State Highway Geometric Design Manual**;

Requirements (b) – (f) no change

3.3.16 Private Ways, Private Roads and Other Private Accesses

The following is to be added to the end of the clause.

All private ways, private roads and other private accesses which serve more than six lots shall have a turning facility as set out in figures 3.3 and 3.4 or as approved by the TA. Where more than eight du's are served, footpaths and lighting shall be provided to the standard required by the TA.

3.3.16.2 Stormwater Design

Paragraph 1 & 2 no change

Accesses sloping up from the road shall have a stormwater collection system at the road reserve boundary so as to avoid stormwater run-off and debris migration onto the public road. Except in rural areas, stormwater shall discharge via an appropriately sized and designed stormwater system acceptable to the TA ~~(see figure 3.8 for examples of typical sump to driveway or right of way)~~. Rural side drains may discharge directly to the roadside drain or where accesses pass over the side drain they shall be provided with a culvert of size appropriate for the design flow ~~but not less than 300 mm diameter.~~ **and approved by the TA.**

Paragraph 3 & 4 no change

3.3.17.1 Urban

Vehicle crossings shall be provided between the edge of the movement lane and the road boundary at the entrance to all private ways and lanes and to any lots, front or rear where access points are clearly identifiable **or standard profile kerb is used** at the subdivision or development stage. **Crossings must be a minimum of 9 m from any intersection. If mountable kerb is used in the development then vehicle crossings are not required at the subdivision or development stage. A heavy duty crossing is required where it is likely to be used for commercial or industrial purposes, serves four or more residential units or where required by the TA.**

Second paragraph no change

Vehicle crossings shall be designed to enable the 99th percentile car to use them without grounding any part of the vehicle, and shall be designed in accordance with the NZTA *Pedestrian planning and design guide*. **The minimum width of crossings shall be 3.5 m.** Structural design shall be adequate to carry the loads to be expected over its design life. All crossings shall be surfaced with asphalt or concrete or paving stone **to match the proposed or existing footpath and** as approved by the TA. **If there is a possibility of more than 40m^2 of hardstand area that produces stormwater run off from the properties towards the road an intercept drain shall be installed at the road boundary as required in 3.3.16.2**

Only one crossing/access point per lot (title) is allowed and crossing width must not exceed 25% of the frontage (other than for a back lot) without the approval of the TA, nor be wider than 6 metres unless approved by the TA.

Ground levels at the boundary, for future garages (at the boundary if permitted) shall be designed such that the vehicle crossing grade does not exceed 4% from the back of the footpath to the boundary.

Remainder of clause no change

3.3.17.2 Rural
First paragraph no change

Vehicle Crossings shall be provided between the surfaced road edge and the lot boundary at a defined and formed access point to every rural title. The crossing shall be sealed to not less the standard of the road surface **or the proposed or existing footpath** and to the road boundary. **The minimum width of crossings shall be 4.5 m.** ~~If the access slopes up from the road the crossing shall be sealed to a minimum distance of 10 m from the edge of the carriageway.~~ Crossings if combined with an adjacent crossing shall meet the standard detail of the Territorial Authority.

The crossing shall not obstruct the side drain. Where the side drain is shallow and only carries small flows during rain, the crossing may pass through the side drain. Where the side drain is of an unsuitable shape or carries flows for significant parts of the year the side drain shall be piped under the crossing. Pipes and end treatments shall be sized appropriately for the catchment intercepted but shall be a minimum of ~~300 mm~~ **200 mm** diameter.

Fourth paragraph no change

The following is to be added to the end of the clause.

All vehicle crossings are to be sited a minimum of 60 m from intersections on arterial roads and 30 m on all other roads. The minimum required sight distance is to be 250 m for an arterial road and 160 m for all other roads.

Letter box bays must be provided for each property and wherever possible the letter boxes are to be grouped together in one bay to provide safe and easy delivery of mail. The layout of the letter box bays are contained in Appendix B Invercargill City Council Standard

Details R29 & R29A. Each letter box shall be on its own approved post. All location of letter box bays shall be on the left side of the route direction of the rural mail delivery and location approved by both NZ Post and the TA. All letter box bays shall be sealed.

At the time of subdivision any existing crossing providing access to the road shall be upgraded to the TA standard or permanently removed. All spacing's between crossings (where farm access or otherwise) shall be maintained as set out above. This requirement also applies to existing crossings where the lot is being split.

Add the following comment

C3.3.17

During the design phase developers should be aware of Council's planning requirements. Developers need to be aware that Council requires back lots with no road frontage to have a turning area within the greater allotment area. There may also be set back requirements. Please refer to the District Plan.

3.3.19.7.1 Sump Location
Requirements (a) & (b) no change

(c) Not further apart than 90 m along any surface system **or greater than 2600 m^2 of catchment area including any run off from properties.**

Figure 3.7 – Kerbs and dish channels – *not part of code*

Figure 3.8 – Typical sump to driveway or right of way – *not part of code*

Figure 3.9 – Flat channel or yard sump – *not part of code*

Figure 3.10 – Hillside sump – *not part of code*

Figure 3.11 – Add-on to back-entry sump for hillside situations – *not part of code*

Figure 3.12 – An alternative for hillside situations – *not part of code*

Figure 3.14 – Double back-entry sump for road low points – *not part of code*

3.3.19.7.4 Sump Leads
Leads should be designed to be of sufficient size to convey all the design capacity of the sump to the system. The minimum size of the lead for all types of sumps shall be ~~200 mm diameter, but 300 mm diameter is desirable to minimise inlet losses and blockage risk~~ **150 mm diameter**. For double sumps and other high capacity sumps the minimum size of lead required is 300 mm diameter

3.4 Construction – *See amended clauses below*

3.4.2.1 Transition Layer

A transition layer may be required for traffic loading in excess of 1 x 10^5 ESA where the subgrade is soft, to prevent ingress of the soft soils into the pavement layers. ~~The transition layer may be filter metal complying with appropriate NZTA specifications or an approved geotextile filter fabric~~ **The use of geogrid, geotextile filter fabric or similar for the transition layer shall only be used at the approval of the TA**. The transition layer shall be compatible with the grading of adjacent layers and be regarded as part of the total depth of the sub-base layer.

3.4.3.1 Acceptable surfacing materials

Paragraph 1 no change

Acceptable surfacing options may include:

(a) Hot laid asphaltic concrete of minimum compacted thickness ~~30 mm~~ **40 mm**, laid over a waterproofing sealcoat;

Remainder of clause no change

Table 3.3 – Recommended surfacing standards

Facility	Minimum Surfacing
Residential turning head	Segmental concrete pavers, concrete, ~~30 mm~~ **40 mm** asphaltic concrete
Public carparks (excl. parallel parks)	Segmental concrete pavers, concrete, ~~30 mm~~ **40 mm** asphaltic concrete
Commercial and industrial turning head	Segmental concrete pavers, concrete, 50 mm asphaltic concrete
Traffic islands and bus stops	Segmental concrete pavers, concrete, 50 mm asphaltic concrete

3.4.14.2 Asphaltic concrete

Asphaltic concrete footpaths and cycle paths shall be placed over not less than 100 mm of compacted basecourse after removal of all organic and soft subgrade. Asphaltic concrete shall be laid in a minimum thickness layer of 30 mm of mix M/10 material. Asphaltic concrete paths shall not puddle water ~~and shall be edged with either concrete or ground treated timber where abutting berms or other grassed areas~~.

3.4.14.4 Surface finish, tolerances

The following is to be added to the end of the clause

Tactile indicators are required to be installed on footpaths at intersections of minor arterial and primary or secondary collector roads. Details must be confirmed with the Territorial Authority.

11. **SECTION 4 - STORMWATER**

4.1 ***Scope – No change***

4.2 ***General – See amended clauses below***

4.2.6 System components
First paragraph no change

These different system components are set out on standard construction drawings contained in Appendix B ICC Standard Details. The drawings are copyright waived and may be adapted by subdivision developers for incorporation into specific designs.

4.3 Design – ***See amended clauses below***

4.3.5 Design criteria
The following is to be added to the end of the clause.

The design shall be based on the Rational Formula, i.e. Q=k*C*i*A where

Q is the design flow rate in litres/sec

k is 2.78 x 10^{-3}

C is the coefficient of run off having the following values:
Residential C = 0.55
Commercial, Industrial C = 0.80
Rural, Reserves C = 0.35

i is the average intensity of the design rainfall in mm/hr. This is based on a five year return period and is determined by the formula:

$$\mathbf{i} = \frac{\mathbf{955}}{\mathbf{19 + 0.75t}}$$

where t – duration of the design storm = te + tf
where te = time of entry of the stormwater into the system. For residential sections te is assumed to be 10 minutes.

tf – time of network flow compressing time of flow in pipes.

A is the area of the contributing catchment in hectares.

Therefore Q can be rewritten as follows:

$$\mathbf{Q} = \frac{\mathbf{1000CA}}{\mathbf{7.16 + 0.28t}}$$ **litres/sec**

4.3.5.1 Design storms

All new **primary** stormwater systems shall be designed to cope with climate change adjusted design storms ~~of at least the annual exceedance probability (AEP) set out in table 4.1 unless specific approval has been obtained from the TA.~~ **with a 20% annual exceedance probability (AEP), a 20% AEP design storm has a return period of 5 years. All new secondary systems shall be designed to cope with 1% AEP (100 year return period) design storms.**

Table 4.1 – Recommended AEP for design Storms – ***Not part of Code***

4.3.5.4 Hydraulic design of stormwater systems

The hydraulic design of stormwater pipes should be based on either the Colebrook-White formula or the Manning formula **or the Rational formula**. System capacity shall be determined from the Colebrook-White or Manning co-efficient as shown in table 4.2. The Colebrook-White and Manning formulae can be found in *Metrication: Hydraulic data and formulae* (Lamont). Manufacturer's specifications should also be referred to.

4.3.7 Low impact design

The following is to be added to the end of the clause.

The Developer shall implement low impact design principles for the treatment of stormwater. Where the Developer does not believe that low impact design methods will be suitable the Developer shall provide reasons for this for approval by the Council.

4.3.7.6 Vegetated swales

First paragraph no change
Requirements (a) – (d) no change

(e) Capacity for a ~~10%~~ **20%** AEP event;
(f) Velocity not greater than 1.5 m/s in a ~~10%~~ **20%** AEP event unless erosion protection is provided;

Requirements (g) & (h) no change

4.3.7.7 Rain gardens

First paragraph no change

(a) System designed to manage a ~~10%~~ **20%** AEP event without significant scour or erosion;

Requirements (b) – (J) no change

4.3.9.3 Minimum pipe sizes

Minimum pipe sizes for public mains and sump leads unless otherwise specified shall be:

Single sump outlets - ~~200 mm~~ **150 mm** internal diameter
Public mains - ~~200 mm~~ **150 mm** internal diameter
~~- 300 mm internal diameter for all other mains and double sump leads.~~

4.3.9.4 Minimum cover
Replace clause with following.

Minimum cover shall be determined by the property connections which require a minimum depth at the property boundary of at least 1.0 metre. Where there are no property connections to govern the cover over the main the minimum cover shall be 600 mm in private property and 900 mm in the road reserve.

4.3.9.5 Minimum gradients and flow velocities
In flat areas gradients should be as steep as possible to control silt deposition. The minimum velocity should be at least ~~0.6 m/s~~ **0.9 m/s** at a ~~flow of half the 50%~~ **20%** AEP design flow. For velocities greater than 3.0 m/s see 5.3.5.6.

4.3.10.1 Standard manholes
Access chambers or MHs shall be provided at all changes of direction, gradient and pipe size, at branching lines and terminations and at a distance apart not exceeding 120 m unless approved otherwise. They shall be easily accessible and located clear of any boundary. All public mains shall terminate with a MH **or Cleaning Eye (CE)** at the upstream end.

See 5.3.8.2 and 5.3.8.3 of this standard for further guidance on the location of MHs.

On pipelines equal or greater than 1 m diameter, the spacing of MHs may be extended with the approval of the TA.

Appendix B ~~drawings CM – 004, CM – 005, and CM – 006~~ **ICC Standard Details D12 – D21** for manholes ~~may~~ **shall** be adopted for stormwater systems.

4.3.10.3 Size of manholes
First paragraph no change

Second paragraph no change

The base layout of MHs shall comply with ~~5.3.8.4.2 of this standard and Appendix B drawings CM – 004 and CM – 005~~ **Appendix B ICC Standard Details D12 – D21.**

4.3.10.4 Shallow manholes (or mini manholes)
For shallow systems (less than 1.2 m to invert) a DN 375/400 or 600 mm minimum diameter MH may be permitted subject to approval by the TA. Such small diameter MHs shall be classified as maintenance shafts (MSs) for the purposes of the spacing covered under this standard. ~~See Appendix B drawings CM – 005.~~

4.3.10.5 Hydraulic flow in manholes – *Not part of Code*

4.3.10.6 Manhole connections
Amend clause to the following.

The bases of all MHs shall be benched and haunched to a smooth finish to accommodate the inlet and outlet pipe. **No plastering within the MH is allowed.**

New inlet pipes shall be cut back to the inside face of the MH and provided with a smooth finish. All chambers are to be made watertight with ~~mortar~~ **epoxy** around all openings.

4.3.11 Connection to the public system

Requirements (a) – (c) no change

(d) The minimum internal diameter of connections shall be:
- (v) 100 mm for residential lots
- (vi) 150 mm for commercial and industrial lots and connections serving two dwellings or residential lots
- (vii) ~~200 mm~~ **Size** for connections serving three or more dwellings or residential lots **to be based on calculations as per the design standards** (unless otherwise approved by the TA);

Requirements (e) – (i) no change
Add the following requirement.

(j) Minimum depth of the connection at the property boundary shall be at least 1.0 metre.

4.3.12 Connection of lateral pipelines to public mains

Replace clause with the following.

All connections to 150mm diameter mains shall be via 45º wye junctions. Mains greater than 150mm diameter including 225mm diameter shall be made using 45º wye junctions or saddles. For mains greater than 225mm diameter, square (90º) saddles may be used. Cutting saddles into pipes shall be done via core drilling. Saddles shall be specifically manufactured for the pipe they are being attached to and appropriate allowances made for the pipe wall thickness. The saddle shall use epoxy, electro fusion, stainless steel bolts or straps to secure the saddle in place. Concrete encasement of the saddle to the exterior of the main pipe is required.

4.4 Approval of proposed infrastructure – *No Change*

4.5 Construction – *See amended clauses below*

4.5.2 Trenching

Guidance is provided in Appendix B ~~drawings CM – 001 and CM - 002~~ **ICC Standard Details D23 & D24.**

Remainder of clause no change

12. **SECTION 5 – WASTEWATER**

5.1 Scope – ***No change***

5.2 General – ***No change***

5.3 Design – ***See amended clauses below***

5.3.5.1 Design flow
First paragraph no change

The design flow shall be calculated ~~by the method nominated by the TA. In the absence of information from the TA the following design parameters are recommended~~ **based on 0.7 litre/second/hectare (l/s/ha). The following design parameters can also be used if approval is granted by the ICC:**

Remainder of clause no change

5.3.5.3 Minimum pipe sizes
First paragraph no change
Table 5.1 no change
Table 5.2 no change

Table 5.3 – Minimum pipe sizes for wastewater reticulation and property connections

Pipe	Minimum size DN (mm)
Connection servicing 1 dwelling unit	100
Connection servicing more than 1 dwelling unit **up to 10 units**	~~150~~ **100**
Connection servicing commercial and industrial lots	150
Reticulation servicing residential lots	150

NOTE – In practical terms, in a catchment not exceeding 250 dwelling units, and where no pumping station is involved, DN 150 pipes laid within the limits of table 5.4 and table 5.5 will be adequate without specific hydraulic design

5.3.5.5 Minimum grade for self cleaning
Self-cleaning of grit and debris shall be achieved by providing ~~minimum grades specified in tables 5.4 and 5.5~~ **grades that allow a minimum flow of 0.6 m/s**.

Table 5.4 & 5.5 no change

5.3.7.1 Pipe location
The preferred layout/location of pipes within roads, public reserves, and private property may vary and shall be to the requirements of ~~each TA~~ **Appendix B ICC Standard Detail R2.**

Remainder of clause no change

5.3.7.5 Minimum cover
Replace clause with the following.

Minimum cover shall be determined by the property connections which require a minimum depth at the property boundary of at least 1.0 metre. Where there are no property connections to govern the cover over the main the minimum cover shall be 600 mm in private property and 900 mm in the road reserve.

5.3.7.11 Bulkheads for pipes on steep grades
Not part of code

5.3.8.1 General
First paragraph no change
Requirements (a) & (b) no change

(c) Terminal maintenance shafts (TMSs) **and/or Cleaning eyes (CE).**

5.3.8.3 Maintenance structure spacing
First paragraph no change

At the permanent end of a wastewater main, the distance from the end maintenance structure to the nearest downstream MH shall not exceed ~~240~~ **200** m (see figure 5.1)

Where a combination of MHs and MSs is used along the same pipe, the maximum spacing between any two consecutive MHs shall not exceed ~~400~~ **200** m irrespective of how many MSs are used between the two MHs (see figure 5.2).

5.3.8.4.1 Manhole materials
Include paragraph at the end of the clause.

There is to be no plastering to be done on the inside of manholes. Acceptable alternatives include concrete with a smooth finish or using epoxy products.

5.3.8.4.2 Base layout
Each MH base ~~shall have:~~ **will be formed as shown in Appendix B ICC Standard Details D12-D21.**

Requirements (a), (b) and (c) not part of code
Figure 5.1 &5.2 no change

5.3.8.4.3 Allowable deflection through MHs
A maximum allowable deflection through a MH shall ~~comply with table 5.8~~ **be no more than 90 degrees.**

5.3.8.4.4 Internal falls through MHs
First paragraph not part of code
Second paragraph no change

On pipes where the internal fall across the base of the MH is not achievable due to a large difference between the levels of incoming and outgoing pipes (see Appendix B ~~drawing CM - 005~~ **ICC Standard Detail – D13**), then internal or external drops shall be provided.

Table 5.8 – Maximum allowable deflections through MHs
Not part of code

Table 5.9 – Minimum internal fall through MH joining pipes of same diameter.
Not part of code

5.3.8.4.7 Covers
Watertight MH covers with a minimum clear opening of 600 mm in diameter, complying with AS 3996, shall be used, unless the TA has an alternative standard. AS 3996 gives direction for the class of cover for particular locations and applications. (See Appendix B ~~drawing CM - 004~~ **ICC Standard Detail – D11)**

5.3.8.5 Maintenance shafts
Where maintenance shafts (MSs) have been approved by the TA, and where it is expected that the human access below ground will not be required, MSs can be used on DN 150, DN 200, and DN 225 pipes as an alternative to MHs, providing 5.3.8.5.1 and 5.3.8.5.2 are satisfied. See Appendix B ~~drawings WW – 001, WW – 003, and WW - 004~~ **ICC Standard Detail – D22.**

Remainder of clause no change

5.3.8.5.2 Design parameters
Requirements (a) – (c) no change

For construction details see Appendix B ~~drawings WW – 003 and WW - 004~~ **ICC Standard Detail – D22.**

5.3.8.6 Terminal maintenance shafts/Cleaning eyes
Where terminal maintenance shaft (TMSs) **and/or cleaning eyes (CEs)** have been authorised by the TA and where it is expected that human access below ground will not be required, TMSs**/CEs** may be used on DN 150, DN 200, and DN 225 pipes as an alternative to MHs, providing the conditions in this standard are satisfied.

For construction details see Appendix B ~~drawing WW - 005~~ **ICC Standard Details D7 & D22.**

5.3.10.5 Connection depth
Replace existing clause (h) with the following

(h) **Minimum depth of the connection at the property boundary shall be at least 1.0 metre.**

5.3.11 Pumping stations and pressure mains

Gravity mains are the Council's preferred reticulation system and are to be used unless it can be shown that gravity mains are not feasible.

Pumping stations and pressure mains shall be designed and installed in accordance with the standards of the TA **and approval for the pump station must be sought at the design stage of the development.** If the TA has no applicable standards, then they shall be designed in accordance with WSA 04.

Remainder of clause no change

5.4 Approval of proposed infrastructure – *No Change*

5.5 Construction – *See amended clauses below*

5.5.2 Trenching

See Appendix B ~~drawings CM – 001 and CM - 002~~ **ICC Standard Details D23 & D24** for guidance.

Remainder of clause no change

13. **SECTION 6 – WATER SUPPLY**

6.1 Scope – ***No change***

6.2 General requirements – ***No change***

6.3 Design – ***See amendments below***

6.3.3 Future development

Replace clause with the following

The water supply system for any development shall be configured to supply:

(a) Any properties that lie between that development and the extent of the existing supply system and

(b) Properties beyond that development which form part of the zone council wishes to eventually reticulate.

For capacity beyond that required for the development in question, Council will contribute monies being the actual difference in cost between infrastructure *materials* required for the ultimate development and that for the particular development.

6.3.5.6 Minimum water demand

The minimum peak domestic demand shall be specified by the TA, or:

(a) Daily consumption of 250 L/p/day **applied to an occupancy rate of at least 2.5 persons/dwelling**

Requirements (b) & (c) no change

(d) The network is to be designed to ~~maintain appropriate nominated pressures for both peak demand (average daily demand in L/s x peaking factor) and firefighting demand scenarios.~~ **suit both scenarios of:**

- **Peak hourly demand.**
- **Firefighting flow plus two thirds of peak hourly demand.**

These figures should be applied to mains of 100 mm diameter or greater. Mains less than 100 mm in diameter can be sized using the multiple dwellings provisions of AS/NZS 3500.1 table 3.2.

6.3.5.10 Design pressure

First paragraph no change

The minimum ~~design~~ pressure ~~is either the minimum pressure defined by the TA or some higher pressure selected to control (minimise) the range of pressures experienced over the normal diurnal variation in the system.~~ **for design scenarios stated in 6.3.5.6 are:**

(a) Peak hourly demand – no less than 250 kPa

(b) Firefighting and two thirds peak hourly demand – no less than 100 kPa.

Maximum pressure shall not exceed 800 kPa.

Remainder of clause no change

6.3.8.2 Reticulation Layout

A principal water main of not less than the nominal internal diameter (DN) 100, fitted with fire hydrants, shall be laid on one side of all public roads and no-exit roads in every residential development. A DN 50 rider main ~~shall~~ **may** be laid along the road frontage of all lots not fronted by the principal main. ~~A DN 50 rider main shall also be provided for service connections where the principle main is DN 250 or larger.~~ The principal mains serving commercial and industrial areas shall be at least DN 150 ~~laid on both sides of the road~~. This requirement may be relaxed in short no-exit roads as long as adequate firefighting coverage is available.

6.3.8.4 Water mains in private property

Replace clause with the following

Water mains are not normally permitted within private property. In extraordinary circumstances when their presence has been agreed by the Territorial Authority, then they will require a registered easement.

6.3.8.8 Rider mains and duplicate mains

~~A rider main shall be laid along the road frontage of all lots not fronted by a principle main.~~ **A rider main may be laid to lots not fronted by the principal main but still within fire protection of a hydrant subject to approval by the TA.**

Remainder of clause no change

6.3.8.11 Location marking of valves and hydrants

Replace clause with the following

Hydrant location markings shall be according to SNZ PAS 4509. Additionally reinforced concrete marker posts shall be set in the ground opposite the hydrant or valve and close to property boundaries. Marker posts shall have inscribed letters as below

"V" to indicate sluice valves, painted white
"AV" to indicate air valves, painted red
"SV" to indicate scour valves, painted blue

6.3.9.4 Deviation of mains around structures

Deviation of a pipeline around an obstruction can be achieved by deflection of the pipeline at joints, to the angular deflection limits stated by the pipe joint manufacturer and with suitable restrained fitting bends. Permitted angular deflection varies with pipe material, pipe wall thickness, pipe PN class, joint type, design and geometry. Some joint types are specifically designed to accommodate angular deflection. **Butt Welded or electrofusion collared** PVC and PE pipes may also be curved along the pipe barrel, between joints, to a minimum radius of curvature not less than that stated by the pipe manufacturer.

6.3.10.3.3 Nominated pipe PN

Replace clause with the following

PN12 or above is to be used.

6.3.12.10.2 Minimum trench width
Pipe trench width design considerations shall be based on the minimum side clearances detailed in Appendix B ~~drawing CM – 001.~~ **ICC Standard Detail – W10.**

C6.3.12.11
In-line valves, especially those DN 100 or larger, should be anchored to ensure stability under operational conditions. See Appendix B drawings ~~WS – 001, WS – 002, WS – 003, WS – 004, and WS – 005.~~ **ICC Standard Detail – W3.**

6.3.12.11.1 Thrust blocks
First paragraph no change
Second paragraph no change
Third paragraph no change

Typical contact areas for selected soil conditions and pipe sizes are shown in Appendix B ~~drawings WS – 004 and WS – 005.~~ **ICC Standard Details W8 & W9.**

Remainder of clause no change

6.3.12.11.2 Anchor blocks
Anchor blocks are designed to prevent movement of pipe bends in a vertical direction. They consist of sufficient mass concrete to prevent pipe movement (see Appendix B ~~drawing WS – 005~~ **ICC Standard Details W8 & W9)**.

6.3.14.1 General
Requirements (a) – (f) no change

(g) Valves shall generally be placed on two of the three legs at a tee intersection or on three of the four legs of a four way intersection so as to limit the number of properties without water during shutdown.

Remainder of clause no change

6.3.14.2 Siting of valves
Replace clause with the following

For standardization, valves shall be placed in line with street boundaries.

6.3.14.3.2 Branch mains – *Not part of Code*

Figure 6.1 – Branch valve adjacent to main – *Not part of Code*

6.3.14.8 Flushing points – *Not part of Code*

C6.3.15.4

AVs are not normally required on reticulation mains in residential areas where the configuration of mains and service connections will usually eliminate small amounts of air accumulated during operation; ~~hydrant should be placed as close as possible to stop valves to facilitate maintenance activities such as cleaning of water mains~~

6.3.16.2 Property service connections
Replace clause with the following

Residential connections shall be 20 mm nominal bore, commercial/industrial connection size shall be as approved by the Territorial Authority. Refer to ICC Standard Detail – W17 for typical connection layout.

6.3.16.2.1 Point of supply
As defined in the ICC water supply bylaw.

6.3.16.2.2 Materials
Pipe shall be PE 80B of pressure rating PN 12.5 Bar.

Refer to ICC Standard Detail – W17 for stopcock specifications.

Tapping bands shall be the full encirclement type to AS/NZS 4793.2009 for all but PE pipes. For PE pipe approved thermo plastic tapping saddles are to be used.

6.3.17.1 Permanent ends of water mains
~~Rider mains, DN <100, may be used to supply the furthest properties beyond the water main.~~ The DN 100 main shall be laid to a point where all properties are provided with the fire protection required by SNZ PAS 4509.

~~A method of flushing shall be provided at the end of the rider main and water main, which shall be suitably anchored (see Appendix B drawing WS – 002).~~

6.4 Approval of proposed infrastructure – ***See amendments below***

6.4.2 Information to be provided
First paragraph no change
Requirements (a)-(f) & (h) no change
(g) Locations and details of thrust blocks and anchors, see Appendix B ~~drawings WS – 004 and WS – 005;~~ **ICC Standard Details W8 & W9;**

6.5 Construction – ***See amendments below***

6.5.2 Embedment
Pipes and fitting shall be surrounded with a suitable bedding material in accordance with Appendix B ~~drawings CM – 001 and CM – 002.~~ **ICC Standard Detail – W10.**

6.5.3.1 Carriageways
Backfilling shall be in accordance with the requirements of the TA.

Pipe trenches within a carriageway shall be backfilled using an approved hardfill placed immediately above the pipe embedment and compacted in layers not exceeding 200 mm in loose depth, as per Appendix B ~~drawings CM – 002.~~ **ICC Standard Detail – W10.**

Remainder of clause no change

6.5.3.2 Berms
Pipe trenches under grass berms and footpaths shall be backfilled in accordance with the requirements of Appendix B ~~drawings CM – 002.~~ **ICC Standard Detail – W10.**

6.5.3.3 Detector tape
Open trenching – backfill shall be placed ~~to 100 mm below existing ground level~~ **at the bottom of the existing road basecourse**. ~~At this point, where required by the TA,~~ **For non metallic pipe** the contractor shall provide and lay metallic 'detector' tape coloured blue, stipulating 'Danger – Water Main Below' (or similar). See Appendix B ~~drawings CM – 001.~~ **ICC Standard Detail – W10.**

6.5.3.4 Tracer wire
For installation by trenchless method tracer wire in the form of a continuous 4 mm^2 multi strand (minimum 4) polythene sleeved copper cable, shall be installed with all non-metallic pipes to allow detection. The wire shall be strapped to the pipe wall by means of a minimum of two complete wraps of heavy duty adhesive tape, at a maximum of 3.0 m intervals. The wire shall have some slack to allow for bends in laying and for future installation of tapping saddles.

Remainder of clause no change

6.5.4 Pressure testing of water mains
Before a new water main is connected to the existing reticulation, a successful pressure test shall be completed. The system test pressure is applied to test the integrity of construction of the pipeline system. The system test pressure will be the pressure rating of the pipe used, the test pressure generally exceeds the actual design pressure of the system (maximum 1.25 times the maximum rated operating pressure of the lowest rated component in the system). See Appendix C for the appropriate testing procedure.

14. **SECTION 7 – LANDSCAPE**

7.1 Scope – No Change

7.2 General – Amend clauses as below

7.2.1 Approval

Consultation with the TA on landscape design and construction at an early stage of the design development is required. Each TA may have specific landscape guidelines which will be detailed in district plans or codes of practice and some areas may be subject to special landscape requirements which will need assessment through a resource consent process. These may be subject to specific design consideration and approval by the TA. Stormwater systems including secondary flow paths shall be considered when landscape designs are determined, so as to avoid conflict or failure of these systems.

7.3.9 Fencing of reserves

The permanent fencing of common boundaries of any reserve including esplanade, reserve accessways, and road boundaries, will be required, Standards and requirements shall be in accordance with the TA's fencing policy at the time. The TA may specify that one or both of the following options apply:

(a) A fencing covenant is registered on all titles of properties with a common boundary to reserve land, indemnifying the TA against all costs of erection and maintenance of fences on common boundaries.

(b) There is a specific fencing design for the reserve or boundary type.

15. **SECTION 8 – NETWORK UTILITY SERVICES**

8.1 Scope – *No change*

8.2 General – *Amend clause as below*

8.2.3
(b) Electric power. The supply of electric power must be by means of an underground system. Ducts shall be installed at the time of road construction to the requirements of the electrical supply authority and the TA corridor manager. Where the developer is intending to provide electric power other than by underground system, the developer shall provide alternative supply arrangements for approval of the TA.

(c) Telecommunications. Arrangements shall be made with the telecommunication supplier for the reticulation of telecommunication facilities. All installations must be underground. Where only part of this reticulation is being supplied initially the arrangements shall include the requisite space being aintained for the installation of the remainder of the reticulation at a later date. Ducts will be supplied to the subdividing developer at the time of road construction for installation in the carriageway formation to the requirements of the telecommunications supplier and the TA corridor manager.

8.3 Design – *See amendments below*

8.3.1.1
The following is to be added to the end of the clause.

Common trenching for power and telecommunication cables is adopted at a distance of between 0.6 metres and 1.2 metres from the boundary. The possibility of common trenching should be discussed with each of the network utility operators during the design phase.

8.4 Construction – *No change*

16. **APPENDIX A – ACCEPTABLE PIPE AND FITTING MATERIALS**

(Informative)

Table A1 and table A2 give information on acceptable pipe and fitting materials. The information is sourced with permission from the Water Services Association of Australia. Refer also to WSA 02 (Sewerage Code of Australia) and WSA 03 (Water Supply Code of Australia) for more information.

Table A1 – Acceptable pipe materials and Standards – ***See amended table***

Table A2 – Acceptable fitting materials and Standards – ***See amended table***

Table A1 - Acceptable pipe materials and Standards

Note - Refer also to WSA 02 (Sewerage Code of Australia) and WSA 03 (Water Supply Code of Australia)

Pipe Materials	Standard Applicable	Stormwater (Gravity)	Wastewater (Pressure Sewer/Rising Main)	Wastewater (Gravity)	Water Supply (Pressure)	Notes
PVC-U	AS/NZS 1260 (Class SN 4, 8, or 16 as required by TA)	✓	-	✓	-	Gravity applications only. Well established methods of repair. Suitable for aggressive groundwater, anaerobic conditions and tidal zones. Can be used for trenchless installation with suitable end load resistant joints.
~~**PVC-U**~~	~~AS/NZS 1254~~ ~~(Class SN 4, or 8, as required by TA)~~	~~✓~~	-	-	-	~~Gravity stormwater applications only.~~
PVC-O	AS/NZS 4441 (Series 1 or Series 2~~, as required by the TA~~ **for pipe less than 200 mm diameter, Series 2 for 200 mm diameter and above**)	-	✓	-	✓	Improved fracture toughness compared with PVC-U. Improved Fatigue resistance compared with PVC-U and PVC-M. NOTE - Use only DI fittings in pumped mains to achieve full fatigue resistance. Has increased hydraulic capacity compared with PVC-U and PVC-M. Suitable for aggressive groundwater, anaerobic conditions, and tidal zones. Specific design for dynamic stre
PVC-U	AS/NZS 1477 (Series 1 or Series 2~~, as required by the TA~~ **for pipe less than 200 mm diameter, Series 2 for 200 mm diameter and above**)	-	✓	-	✓	Well established methods of repair. Alternative installation techniques possible, for example slip lining. Suitable for aggressive groundwater, anaerobic conditions, and tidal zones. Can be used for trenchless installation with suitable end load resistant joints. Specific design for dynamic stresses (fatigue) required for pressure sewer applications.

Table A1 - Acceptable pipe materials and Standards (continued)

Pipe Materials	Standard Applicable	Stormwater (Gravity)	Wastewater (Pressure Sewer/Rising Main)	Wastewater (Gravity)	Water Supply (Pressure)	Notes
~~PVC-M~~	~~AS/NZS 4765~~ ~~(Series 1 or Series 2, as required by the TA)~~	-	~~✓~~	-	~~✓~~	~~Improved fracture toughness compared with PVC-U.~~ ~~Has increased hydraulic capacity compared with PVC-U.~~ ~~Inferior fatigue resistance compared with PVC-U and PVC-O.~~ ~~Suitable for aggressive groundwater, anaerobic conditions and tidal zones.~~ ~~Specific design for dynamic stresses (fatigue) required for pressure sewer applications.~~
PE (PE 80B or PE 100 as required by the TA)	AS/NZS 4130	-	✓	-	✓	Generally for pressure applications. Can be easily curved to eliminate the need for bends. Alternative installation techniques possible, for example pipe cracking, direction drilling, and slip lining. Can be welded to form an end load resistant system. Compression couplings and end load resistant fittings are available in smaller diameters. Pipe longitudinal flexibility accommodates large differential ground settlement. Fusion jointing requires skilled installers and special equipment. Retrospective installation of fittings/repair complicated. Specific design for dynamic stresses (fatigue) required for pressure sewer applications. ≤ DN 125 available in long coiled lengths for fewer joints. Suitable for aggressive groundwater, anaerobic conditions or tidal zones. Suitable for ground with high subsidence potential, for example fill or mining areas.

Table A1 - Acceptable pipe materials and Standards (continued)

Pipe Materials	Standard Applicable	Stormwater (Gravity)	Wastewater (Pressure Sewer/Rising Main)	Wastewater (Gravity)	Water Supply (Pressure)	Notes
PE (Stiffness Class SN 4, 8, 10, or 16 as required by the TA)	AS/NZS 5065	✓	-	✓	-	Only for gravity applications. Can be easily curved. Alternative installation techniques possible, for example pipe cracking and slip lining. Can be welded to form an end load resistant system. Fusion jointing requires skilled installers and special equipment. Retrospective installation of fittings/repair complicated. Smaller diameters available in long coiled length for fewer joints. Suitable for aggressive groundwater, anaerobic conditions, or tidal zones.
PP (Stiffness Class SN 4, 8, 10, or 16 as required by the TA)	AS/NZS 5065	✓	-	✓	-	Only for gravity applications
GRP	AS 3571.1	✓	✓	✓	-	Alternative installation techniques possible, for example slip lining. UV resistant (special product). Custom made fittings can be manufactured. Suitable for use without additional corrosion protection in areas where stray electrical currents occur. Low impact resistance and ease of damage to thermosetting resin, makes GRP susceptible to damage during transportation, and installation, in above ground installations, from vandalism, or when damaged as a consequence of nearby excavation. Suitable for aggressive groundwater, anaerobic conditions or tidal zones.

Table A1 - Acceptable pipe materials and Standards (continued)

Pipe Materials	Standard Applicable	Stormwater (Gravity)	Wastewater (Pressure Sewer/Rising Main)	Wastewater (Gravity)	Water Supply (Pressure)	Notes
~~**GRP**~~	~~AS 3571.2~~	-	-	-	~~✓~~	~~Alternative installation techniques possible, for example slip lining.~~ ~~UV resistant (special product).~~ ~~Custom made fittings can be manufactured.~~ ~~Suitable for use without additional corrosion protection in areas where stray electrical currents occur.~~ ~~Low impact resistance and ease of damage to thermosetting resin, makes GRP susceptible to damage during transportation, and installation, in above ground installations, from vandalism, or when damaged as a consequence of nearby excavation.~~ ~~Suitable for aggressive groundwater, anaerobic conditions or tidal zones.~~
VC	BS EN 295	✓	-	✓	-	Gravity applications only. Has benefits for particularly aggressive industrial wastes. Not recommended for active seismic (earthquake) zones, or unstable ground.
RRRC (rubber ring joint reinforced concrete)	AS/NZS 4058	✓	-	✓	-	Requires protection from hydrogen sulphide attack in sewer applications, by plastic lining or selection of appropriate cement additives.

Table A1 - Acceptable pipe materials and Standards(continued)

Pipe Materials	Standard Applicable	Stormwater (Gravity)	Wastewater (Pressure Sewer/Rising Main)	Wastewater (Gravity)	Water Supply (Pressure)	Notes
CLS (SCL) (concrete lined welded steel)	NZS 4442 AS 1579	-	✓	-	✓	Cement mortar lined, PE coating below ground or heavy duty coating above ground. High mechanical strength and toughness. Available in long lengths. RRJ and welded joints available. Custom Made, specially configured steel fittings can be made to order. Can be welded to form a system that will resist end load and joint permeation. UV resistant/vandal proof/impact resistant (where PE coated). Cathodic protection (CP) can be applied to electrically continuous pipelines to provide enhanced corrosion protection. PE lined and coated - RRJ. As above for CLS (SCL). Suitable for conveying soft water. Corrosion resistant under all conditions. General notes Standard Portland cement mortar not resistant to H_2S attack, at any high points or discharge points in the main. High alumina cement has improved resistance. Welded joints require skilled installers and special equipment. Welded joints require reinstatement of protection systems on site. Special design required for welded for welded installations parallel, and adjacent to high voltage (> 66 kV) transmission lines. Cathodic protection requires regular monitoring and maintenance. Seal coating may be required over cement mortar linings, when conveying soft water, or in low flow extremities of reticulation mains, to prevent potentially high PH. Suitable for high load applications such as railway crossings and major roads. Large diameters are available. Suitable for aerial or suspended pipeline applications.

Table A1 - Acceptable pipe materials and Standards (continued)

Pipe Materials	Standard Applicable	Stormwater (Gravity)	Wastewater (Pressure Sewer/Rising Main)	Wastewater (Gravity)	Water Supply (Pressure)	Notes
DI (ductile iron pipe)	AS/NZS 2280 AS 3681	-	✓	-	✓	Fatigue analysis not normally required (pressure sewer applications). High mechanical strength and toughness. Ease of jointing. UV resistant/vandal proof/impact resistant. Well established methods of repair. Suitable for high pressure and above ground pipelines. Restrained joint systems available. Sufficient ring stiffness to not rely on side support, for structural adequacy for the usual water supply installation depths. Elevated PH may occur when conveying soft water, or in low flow extremities of reticulation mains. PE sleeving is required, and must be carefully applied and repaired when damaged. Standard Portland cement mortar not resistant to H_2S attack, at any high points or discharge points in the main. (Wastewater applications. High alumina cement has improved resistance.) Not suitable for aggressive groundwater, anaerobic conditions, or tidal zones.
~~**Corrugated aluminium pipe**~~	~~AS/NZS 2041~~	~~✓~~	~~-~~	~~-~~	~~-~~	~~Generally of short length (for culverts and so on). Joints need consideration in fine soils with high water tables. Invert may need lining to extend life.~~
~~**Corrugated steel pipe**~~	~~AS/NZS 2041 NZS 4405 NZS 4406~~	~~✓~~	~~-~~	~~-~~	~~-~~	~~Generally of short length (for culverts and so on). Joints need consideration in fine soils with high water tables. Invert may need lining to extend life.~~
~~**ABS**~~	~~AS/NZS 3518 AS/NZS 3690 AS/NZS 3879~~	~~-~~	~~✓~~	~~-~~	~~✓~~	~~Specific design for dynamic stresses (fatigue required for pressure sewer applications).~~
PVC-U	AS/NZS 1260	✓	-	✓	-	Gravity applications only.
~~**PVC-U**~~	~~AS/NZS 1254~~	~~✓~~	~~-~~	~~-~~	~~-~~	~~Gravity stormwater applications only.~~

Table A2 - Acceptable fitting materials and Standards

Fittings Materials	Standard Applicable	Stormwater (Gravity)	Wastewater (Pressure Sewer/Rising Main)	Wastewater (Gravity)	Water Supply (Pressure)	Notes
~~**PVC-U**~~	~~AS/NZS 1254~~	~~✓~~	-	-	-	~~Gravity stormwater applications only.~~
PE	AS/NZS 4129	✓	✓	✓	✓	PE pressure fittings, including mechanical compression, butt fusion or electrofusion, as approved by the TA.
Access covers and grates	AS 3996	✓	-	✓	-	
Ductile iron	AS/NZS 2280	-	✓	-	✓	Generally for pressure applications. Shall be coated with a polymeric coating, applied in accordance with AS/NZS 4158
Ductile iron unrestrained mechanical couplings	AS/NZS 4998	-	✓	-	✓	Generally for pressure applications. Shall be coated with a polymeric coating, applied in accordance with AS/NZS 4158
~~**Plastic or**~~ **metallic tapping bands**	AS/NZS 4793	-	✓	-	✓	Generally for pressure applications. Tapping bands used on flexible pipes shall be AS/NZS 4793 Type F - that is. 'full circle design.' Ductile iron tapping bands shall be coated with a polymeric coating, applied in accordance with AS/NZS 4158.
Fire hydrants	NZS/BS 750	-	~~✓~~	-	✓	Generally pressure applications.
Resilient seated gate valves	AS 2638.2	-	✓	-	✓	Generally pressure applications.
PE (Stiffness Class SN 4, 8, 10 or 16 as required by the TA)	AS/NZS 5065	✓	-	✓	-	Gravity applications only.
PP (Stiffness Class SN 4, 8, 10 or 16 as required by the TA)	AS/NZS 5065	✓	-	✓	-	Gravity applications only.

17. **APPENDIX B**

Replace Appendix B NZS 4004 (Page 203-221) with the following Invercargill City Council Standard details

ICC Standard Roading Details ..... PAGE

R1 Standard Legends 49
R2 Cross Section – Standard Position of Services 50
R4 Standard Corner Details 51
R5 Standard Kerb and Channel Details 52
R6 Standard Crossing Layouts 53
R7 Mountable Kerb and Channel Details 54
R8 Dish Channel, Road Edge, Kerb Only and Traffic Island Mountable Kerb Details 55
R9 Standard Street Name Blade Details 56
R10 Roundabout/Chevron Name Board 57
R11 Asphalt and Concrete Footpath Construction 58
R12 Pedestrian Accessway 59
R13A Stormwater Road Sump 60
R16 Recommended Sump Connections to Stormwater Main 61
R17 Standard Rural Sump Manhole/Blowhole With Webgrating 62
R17A Standard Rural Sump Manhole/Blowhole With Cast Iron Sump Grate and Frame 63
R20 Asphalt Road Hump Detail 64
R20A Asphalt Road Platform Detail 65
R21 Standard Vehicle Crossing Construction Details 66
R22 Standard Concrete Vehicle Crossing Construction Details 67
R23 Standard Vehicle Crossing Construction Details for Gravel Footpaths 68
R24 Typical Details – Removable pedestrian barrier 1 69
R25 Typical Details – Removable pedestrian barrier 2 70
R26 Cycle Stand 71
R28 Rural Accessway Layout 72
R28B Rural Accessway Layout (two to six dwellings) 73
R29 Rural Accessway Layout With Letter Box 74
R29A Rural Letter Box Accessway Layout 75
R30 Typical Construction Details for Rural Accessway 76
R31 Splitter Island Details 77
R37 Cycle Holding Rail/Give Way Sign 78
R41 Street Lighting Standard Ground Planted Columns 79
R44 Passing Bay Detail 80

DRAINAGE DETAILS ..... PAGE

D1 Standard Silt Trap With Cleaning Eye 81
D3 100/150 ∅ uPVC Standard Connection Showing Inclined Riser 82
D4 100/150 ∅ uPVC Standard Connection Showing Vertical Riser 83
D5 Typical Details – Boundary Cleaning Eye 84
D6 Typical Detail Running Trap 85
D7 Standard Cleaning Eye 86
D9 C.I. Framed Cover for Cleaning Eye 87
D10 Detail of Saddle Connection 88
D11 C.I. Frame and Cover for Heavy Duty Manhole 89
D12 Standard Concrete Sump Manhole 90
D13 Standard Concrete Drop Manhole for 100 ∅ and 150 ∅ uPVC Pipe 91
D14 Standard Precast Concrete Manhole 92
D15 Standard Concrete Manhole 150 ∅ to 675 ∅ Mains 93
D16 Standard Concrete Manhole with Reducing Diameter Mains 150 ∅ to 600 ∅

Mains 94
D17 Standard Concrete Manhole with Reducing Diameter Mains 750 ∅ to 1800 ∅ RCRRJ Mains 95
D18 Standard Concrete Manhole 750 ∅ to 1800 ∅ Mains 96
D20 Standard Concrete Manhole 0° to 59° Bend 97
D21 Standard Concrete Manhole 60° to 90° Bend 98
D22 Maintenance Shaft for 150 ∅ to 225 ∅ Mains 99
D23 Standard Embedment and Trenchfill Arrangement 100
D24 Standard Embedment for Flexible and Rigid Pipes 101
D24A Standard Embedment for Flexible and Rigid Pipes 102
D26 Standard Detail of Service Support 103
D28 Standard Detail for Timbering Open Ditches 104
D29 Foulsewer Manhole Gas Tray 105
D30 Conversion of Channel Connection Showing Inclined Riser 106

WATER DETAILS ..... PAGE
W1 Hydrant Installation 107
W3 Valve Installation 108
W5 Valve Surface Box 109
W6 Toby Box 110
W7 Surface Box Screwdown Hydrant 111
W8 Typical Details Thrust Block Installation Tee's, Bends and Tapers 112
W8A Typical Details Thrust Block Installation Tee's, Bends and Tapers – Table 113
W9 Typical Details Thrust Block Installation Gate Valves and Vertical Bends 114
W9A Typical Details Thrust Block Installation Gate Valves and Vertical Bends 115
W10 Typical Trench Detail of Backfilling Requirement 116
W11 Fire Hydrant Concrete Indicator Post 117
W12 Scour Valve Concrete Indicator Post 118
W13 Air Valve Concrete Indicator Post 119
W14 Valve Concrete Indicator Post 120
W16A Surface Box Lid for Double Spindle Hydrant 121
W16B Surface Box Frame for Double Spindle Hydrant 122
W17 Property Services Connection to Main 123

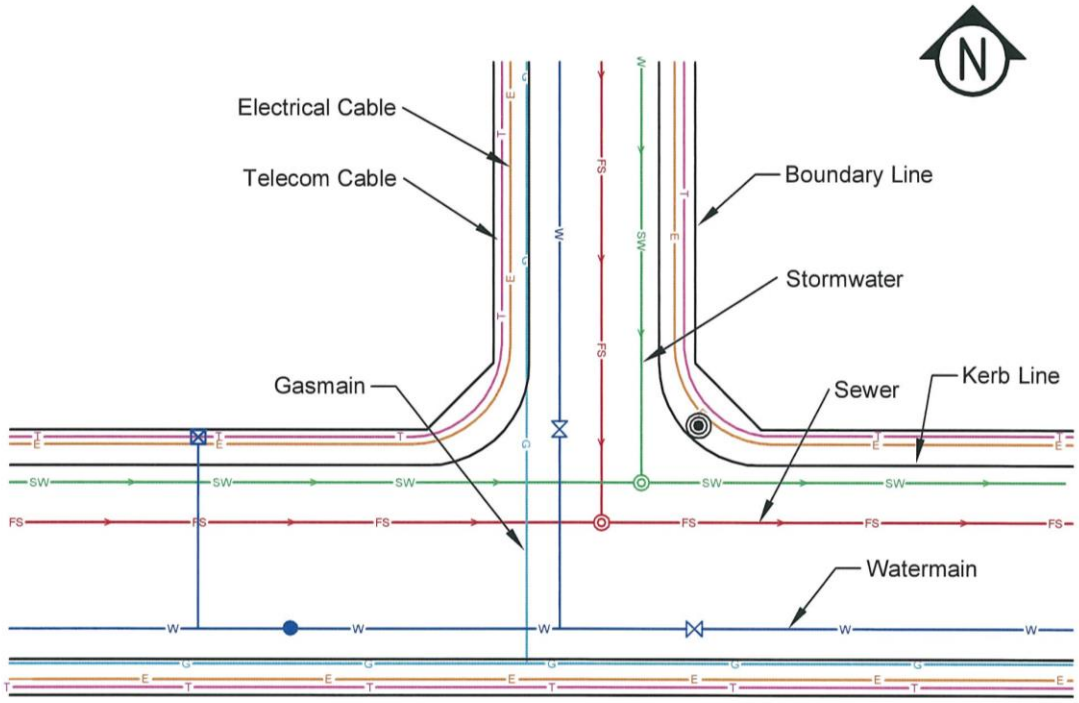

TYPE OF SERVICE	LINETYPE	SYMBOLS
Foul Sewer	FS FS	Manhole
Foul Sewer (Rising)	FS-R	Cleaning Eye
Foul Sewer (Abandoned)	FS-AB	Pump Station
Stormwater	SW SW	Manhole
Stormwater (Sealed)	SW-S	Cleaning Eye
Stormwater (Abandoned)	SW-AB	Pump Station
Watermain	W W	Hydrant, Air Valve
Watermain (Supply)	W-SU	Valve, Toby Box
Watermain (Abandoned)	W-AB	Scour Valve
Gasmain	G G	
Underground Electricity Cable	E E	
Overhead Electricity Cables	E-OH E-OH	
Underground Telecom Cable	T T	
Overhead Telecom Cable	T-OH T-OH	
		Standard Stone

Not to scale

Invercargill CITY COUNCIL	**STANDARD LEGENDS**	Fig. R1 Rev. 4 Date 5/08

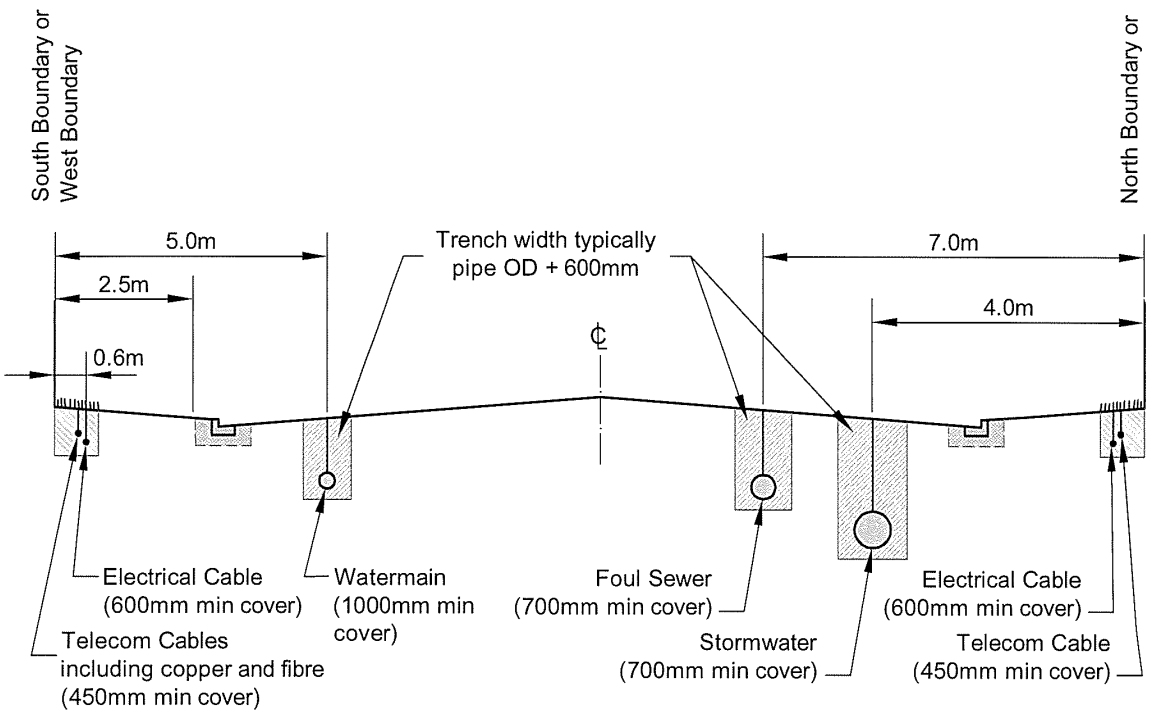

Not to scale

Invercargill CITY COUNCIL	**CROSS SECTION - STANDARD POSITION OF SERVICES**	Fig. R2 Rev. 5 Date 2/13

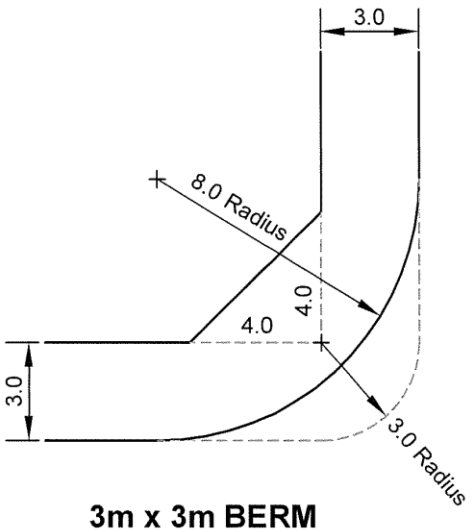

3m x 3m BERM

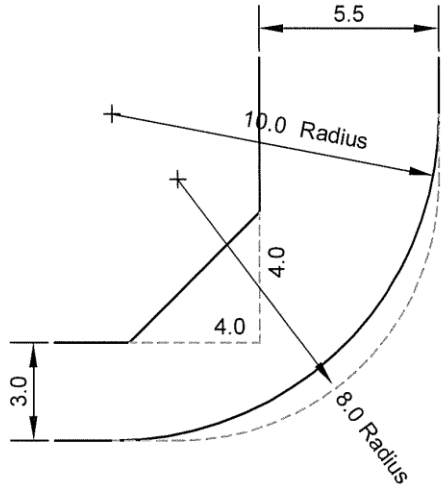

3m x 5.5m BERM

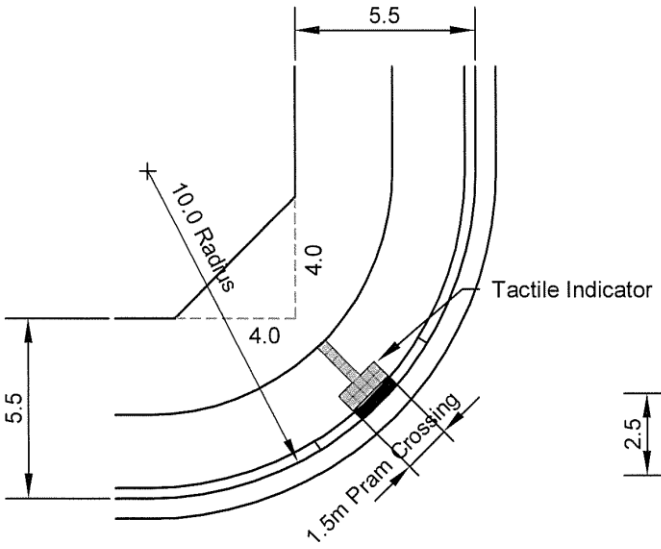

5.5m x 5.5m BERM SHOWING TYPICAL 'PRAM' CROSSING AND TACTILE INDICATOR

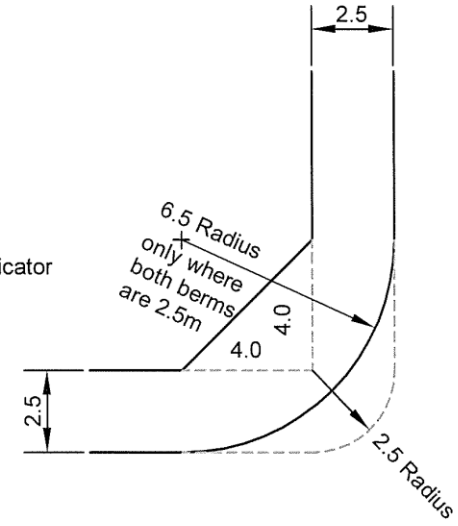

2.5m x 2.5m BERM

Not to scale

Invercargill CITY COUNCIL	STANDARD CORNER DETAILS	Fig. R4 Rev. 4 Date 7/08

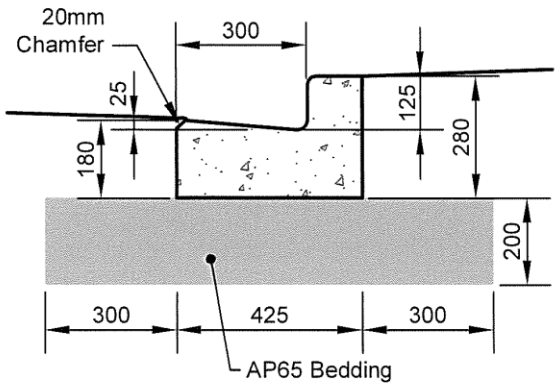

STANDARD KERB AND CHANNEL

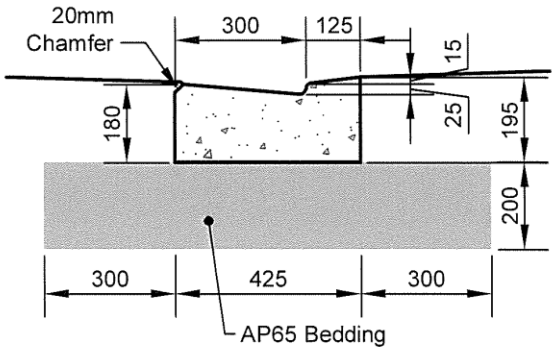

CROSSING KERB AND CHANNEL

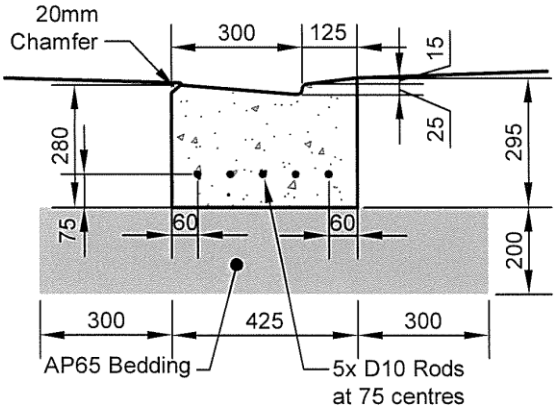

HEAVY DUTY SLIP FORMED CROSSING KERB AND CHANNEL

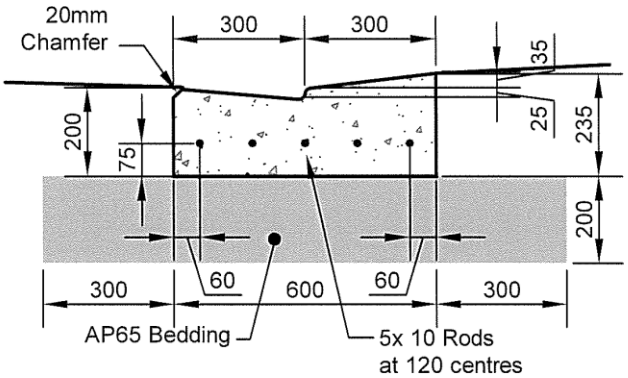

HEAVY DUTY VEHICLE CROSSING KERB AND CHANNEL

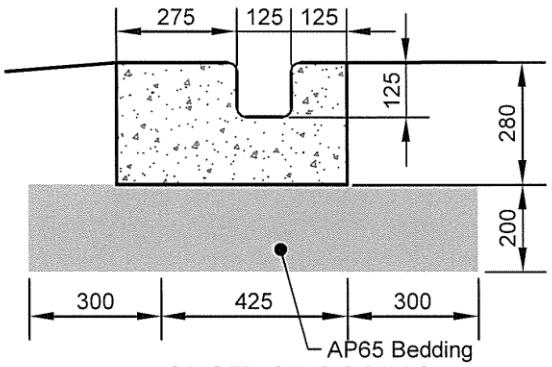

SLOT CROSSING

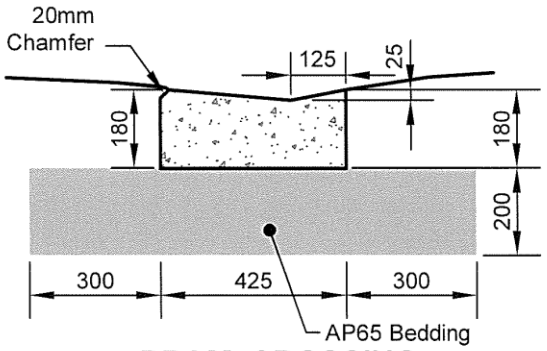

PRAM CROSSING

Notes

1. All radii to be 20mm min.
2. All concrete to be 20MPa (min) certified concrete to NZS 3104.
3. Clegg Impact Valve of bedding to be 35 (min.)
4. All Kerb and Channel to be constructed with one pour.

Not to scale

Invercargill CITY COUNCIL	STANDARD KERB AND CHANNEL DETAILS	Fig. R5 Rev. 6 Date 6/12

STANDARD VEHICLE CROSSING

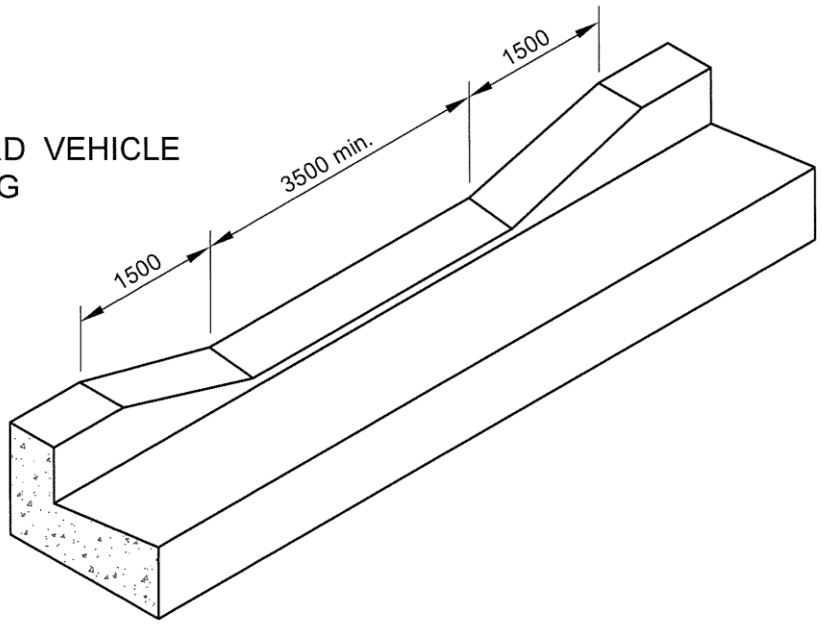

PRAM CROSSING

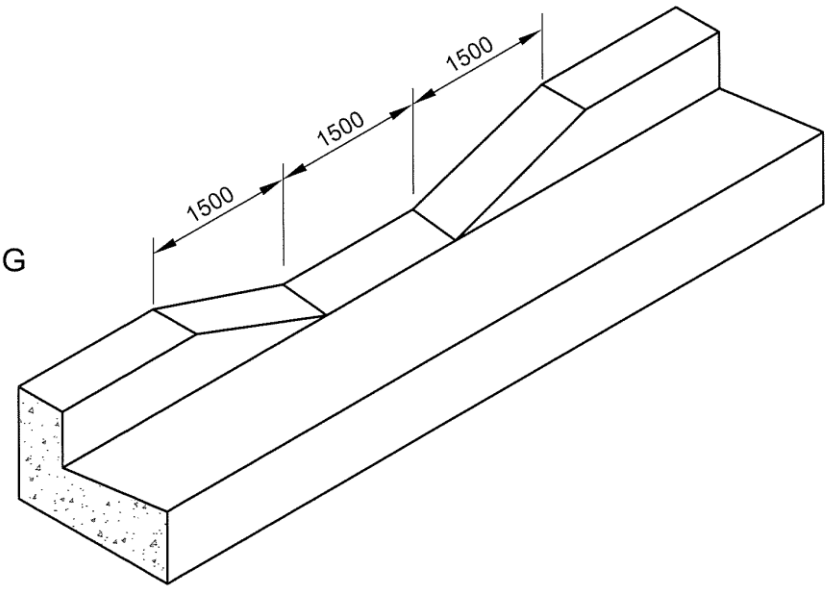

Not to scale

Invercargill CITY COUNCIL	**STANDARD CROSSING LAYOUTS**	Fig. R6 Rev. 2 Date 6/07

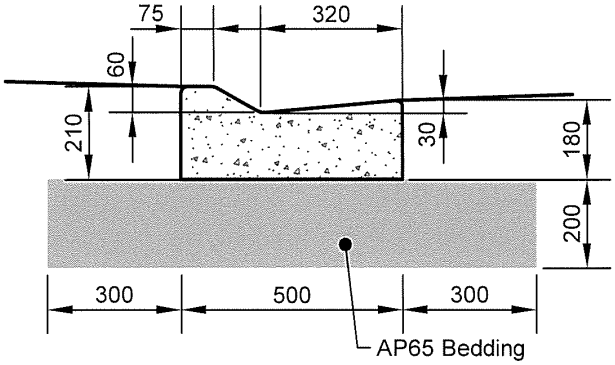

MOUNTABLE KERB AND CHANNEL

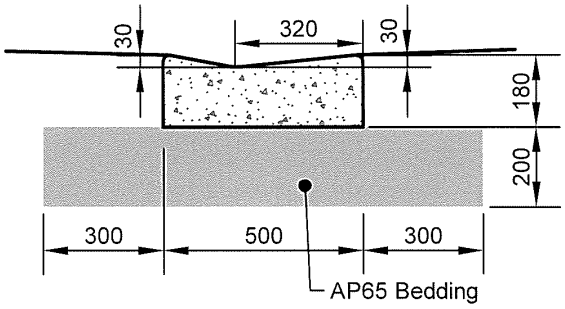

MOUNTABLE KERB AND CHANNEL PRAM CROSSING

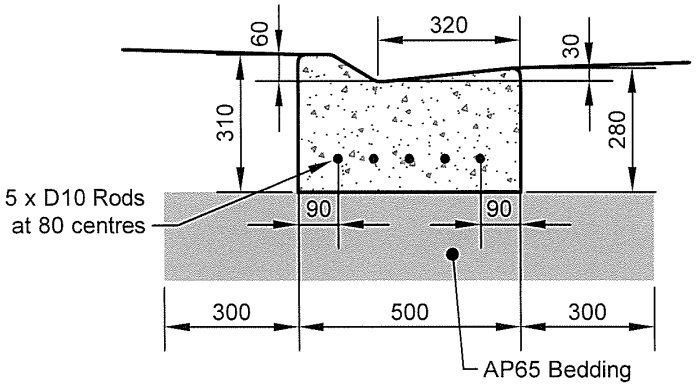

HEAVY DUTY MOUNTABLE KERB AND CHANNEL

Notes

1. All radii to be 20mm min.
2. All concrete to be 20MPa (min) certified concrete to NZS 3104.
3. Clegg Impact Value of bedding to be 35 (min.)
4. All Kerb and Channel to be constructed with one pour.

Not to scale

Invercargill CITY COUNCIL	**MOUNTABLE KERB AND CHANNEL DETAILS**	Fig. R7 Rev. 4 Date 7/08

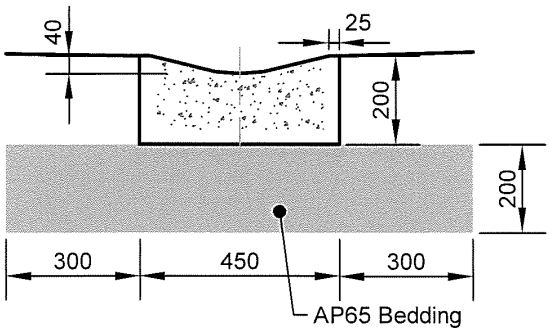

DISH CHANNEL

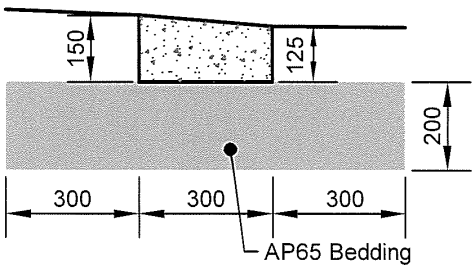

ROAD EDGE

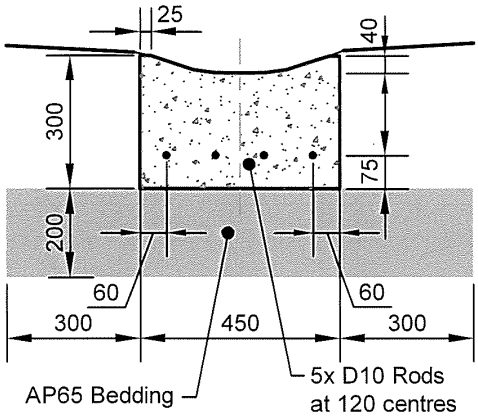

HEAVY DUTY DISH CHANNEL

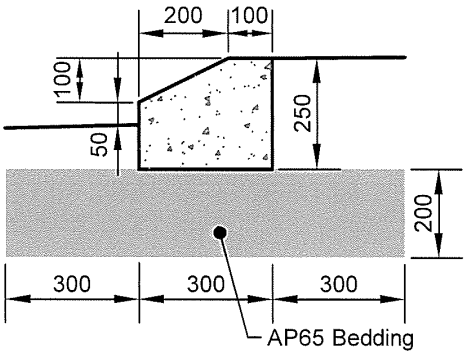

TRAFFIC ISLAND MOUNTABLE KERB

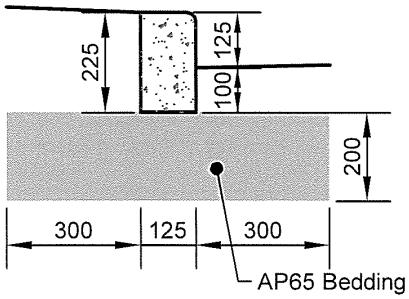

KERB ONLY

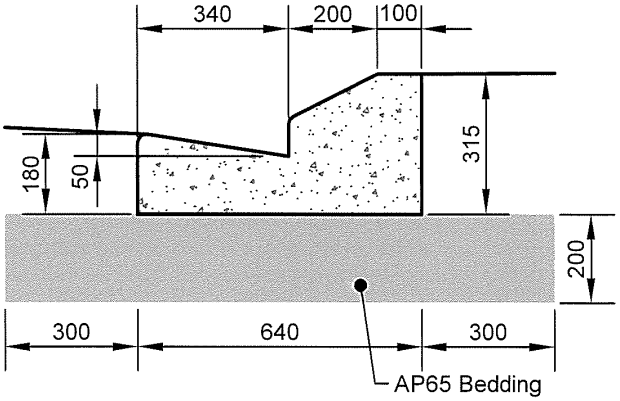

TRAFFIC ISLAND MOUNTABLE KERB AND CHANNEL

Notes

1. All radii to be 20mm (min).
2. All concrete to be 20MPa (min) certified concrete to NZS 3104.
3. Clegg Impact Valve of bedding to be 35 (min).
4. All Dish and Kerbs to be constructed with one pour.

Not to scale

Invercargill CITY COUNCIL	**DISH CHANNEL, ROAD EDGE, KERB ONLY AND TRAFFIC ISLAND MOUNTABLE KERB DETAILS**	Fig. R8 Rev. 4 Date 7/08

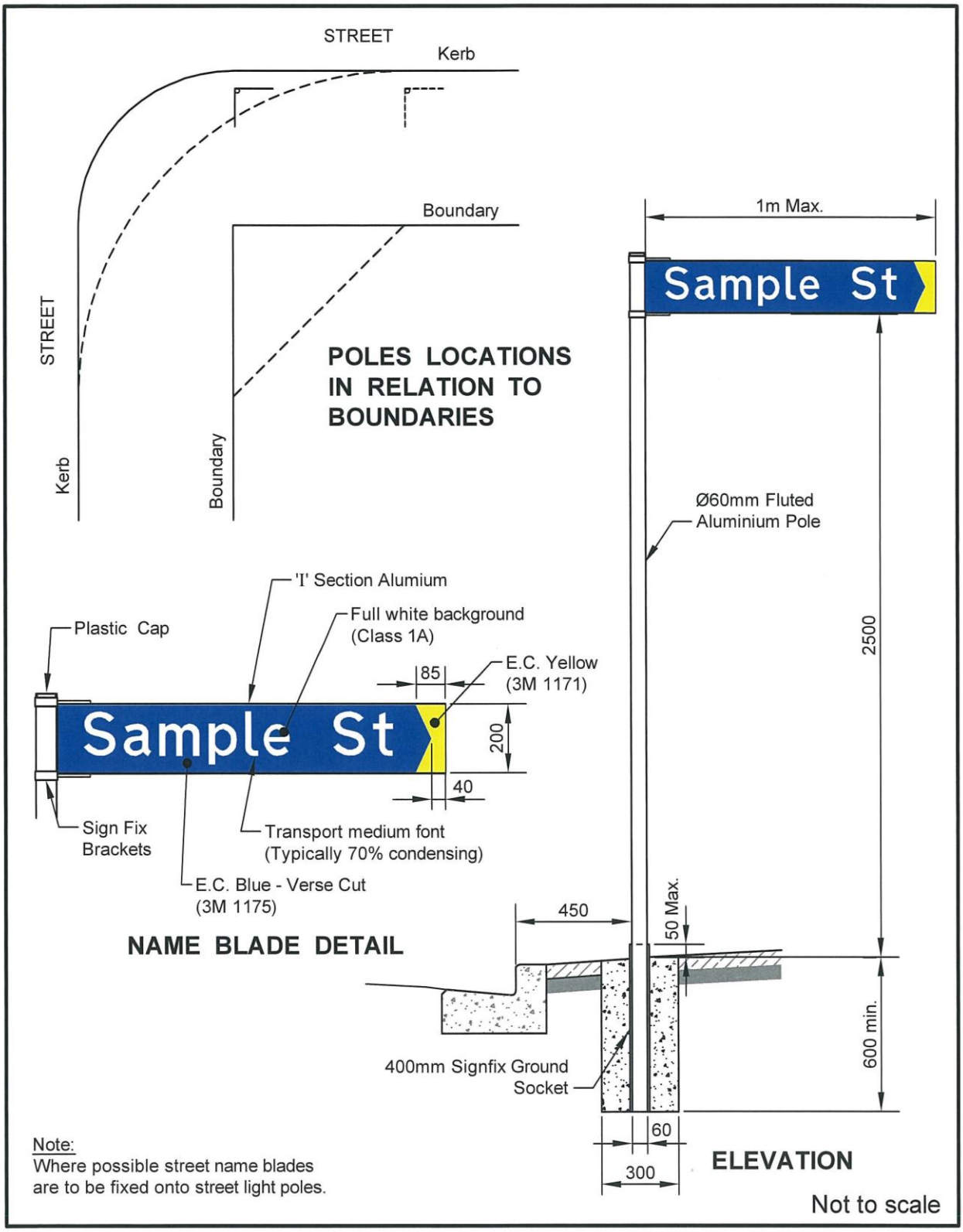

Invercargill CITY COUNCIL	**STANDARD STREET NAME BLADE DETAILS**	Fig. R9 Rev. 2 Date 3/08

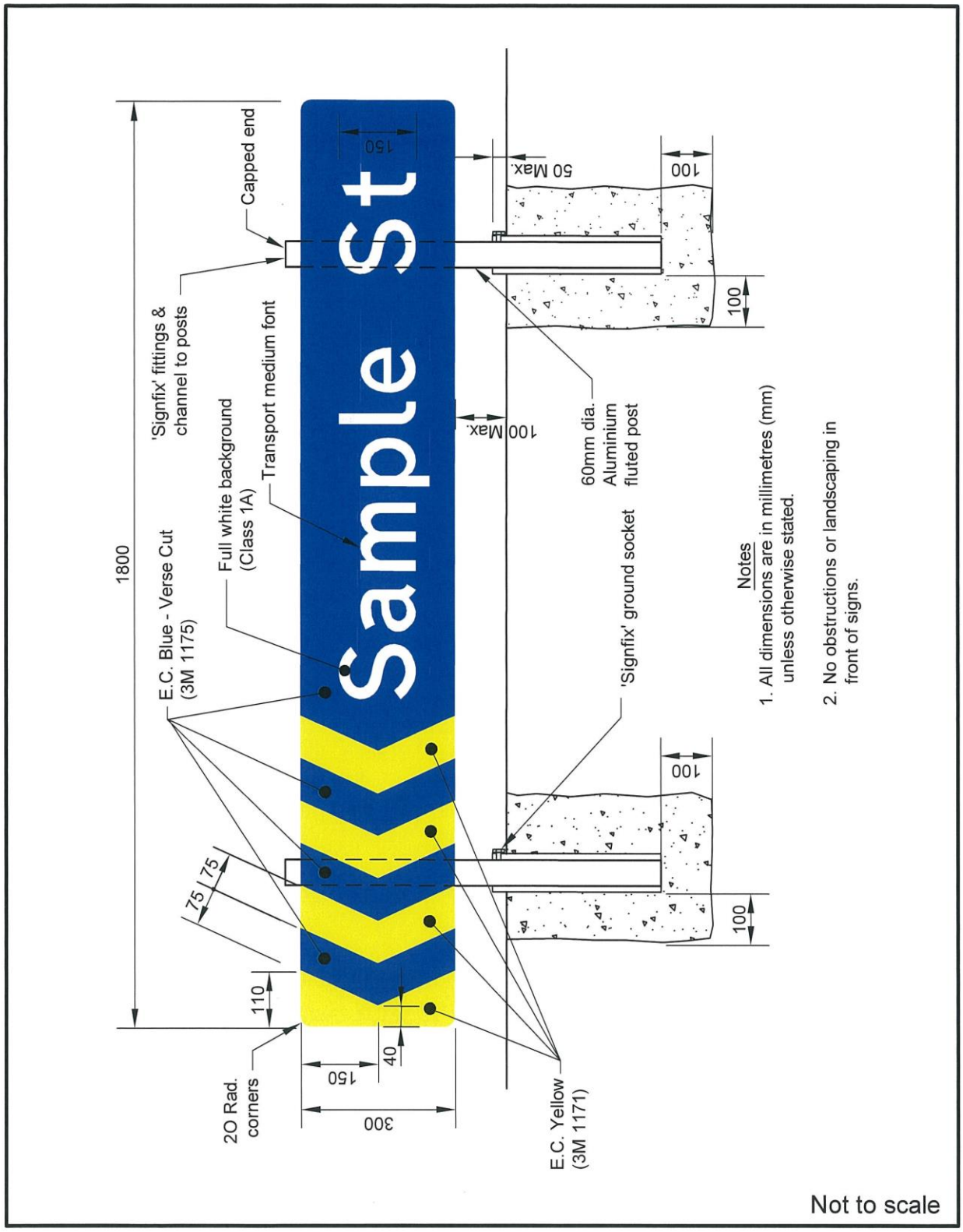

Invercargill CITY COUNCIL	ROUNDABOUT CHEVRON / NAME BOARD	Fig. R10 Rev. 2 Date 5/08

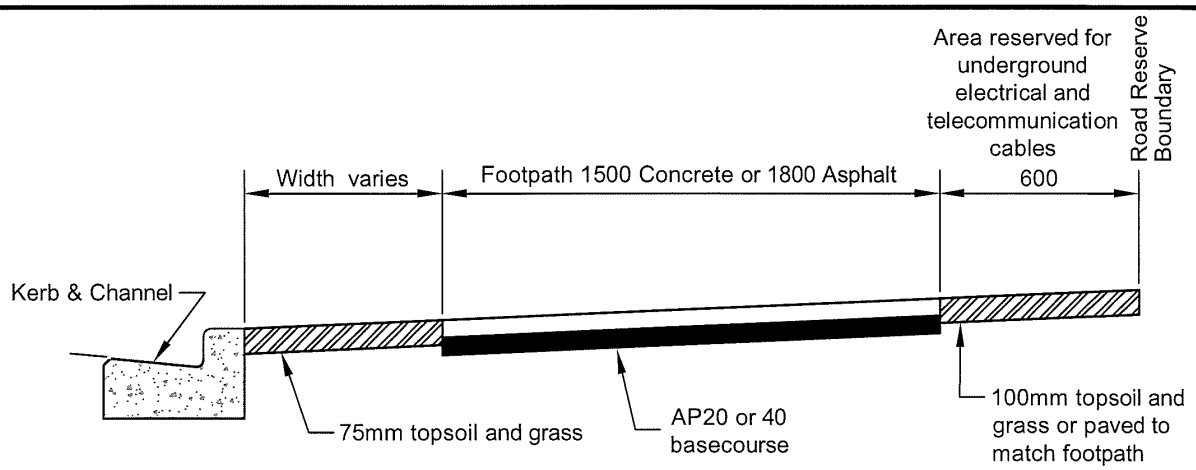

FOOTPATH CONSTRUCTION AT BOUNDARY

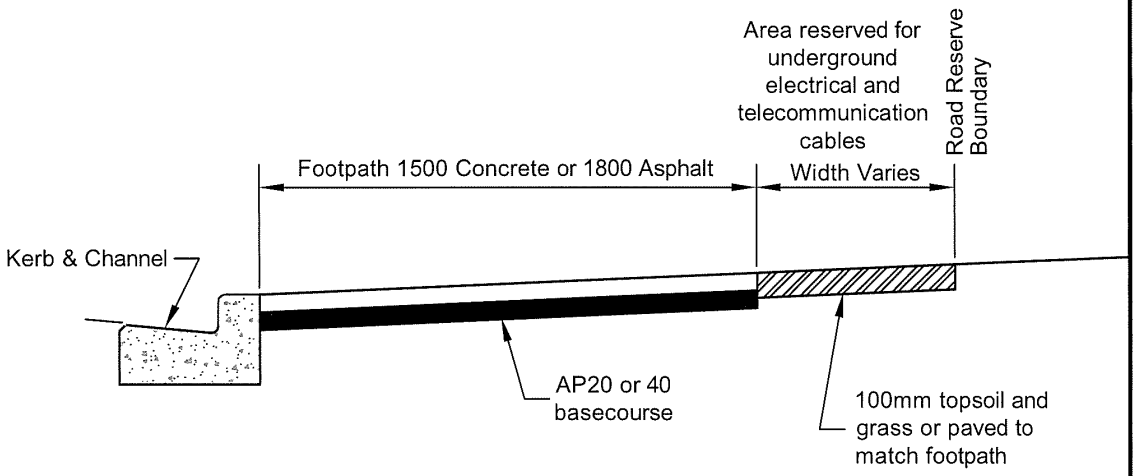

FOOTPATH CONSTRUCTION AT KERB LINE

	Basecourse Depth	Paving Depth
Concrete	100mm	100mm
Asphalt	100mm	25mm

FOOTPATH CONSTRUCTION DETAILS

Note:
1. Crossfall of berm and footpath 2.0% unless approval given by Engineer.
2. Clegg Impact Value to basecourse to be 30 (min).
3. All concrete to be 20MPa (min) certified concrete to NZS 3104.

Not to scale

Invercargill CITY COUNCIL	ASPHALT AND CONCRETE FOOTPATH CONSTRUCTION	Fig. R11 Rev. 6 Date 2/13

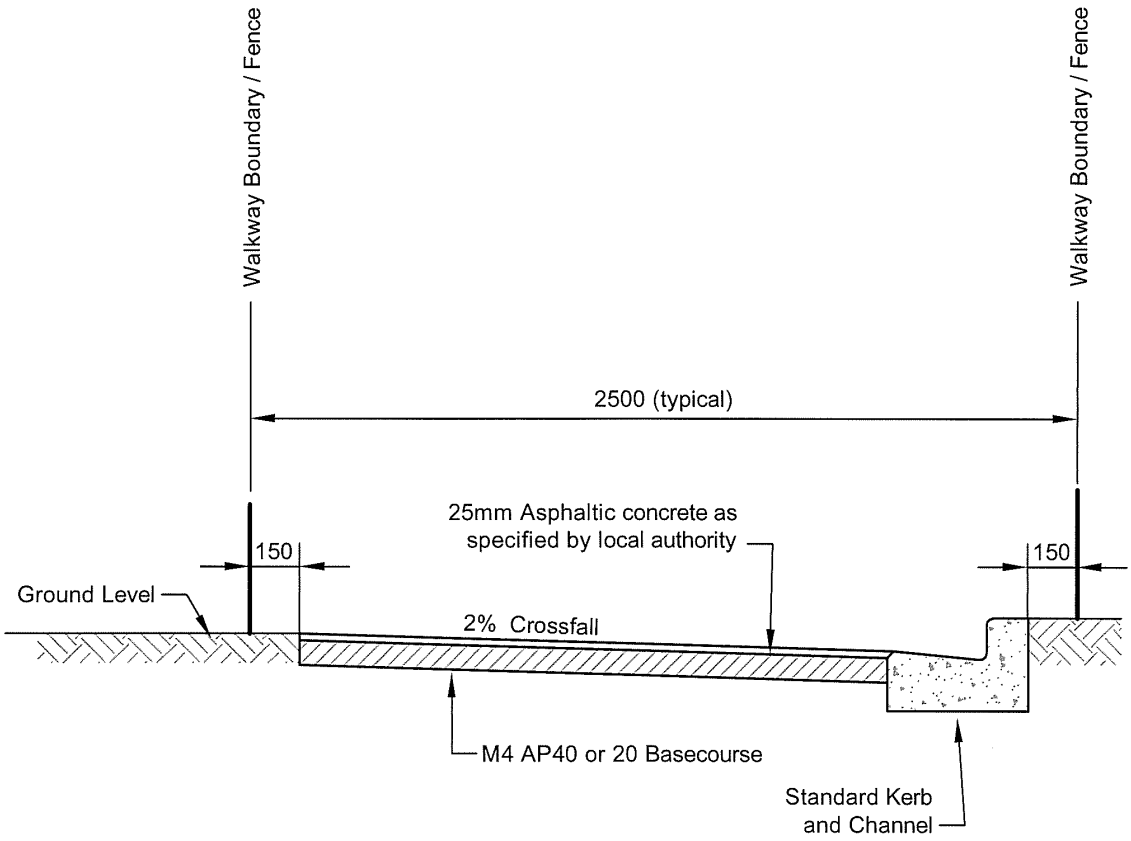

	Basecourse Depth	Paving Depth
Concrete	100mm min	100mm
Asphalt	100mm min	25mm min

ACCESSWAY CONSTRUCTION DETAILS

Note:
1. Clegg Impact Valve of basecourse to be 30 (min)
2. All concrete to be 20MPa (min) certified concrete to NZS 3104.

Not to scale

Invercargill CITY COUNCIL	**PEDESTRIAN ACCESSWAY**	Fig. R12 Rev. 5 Date 2/13

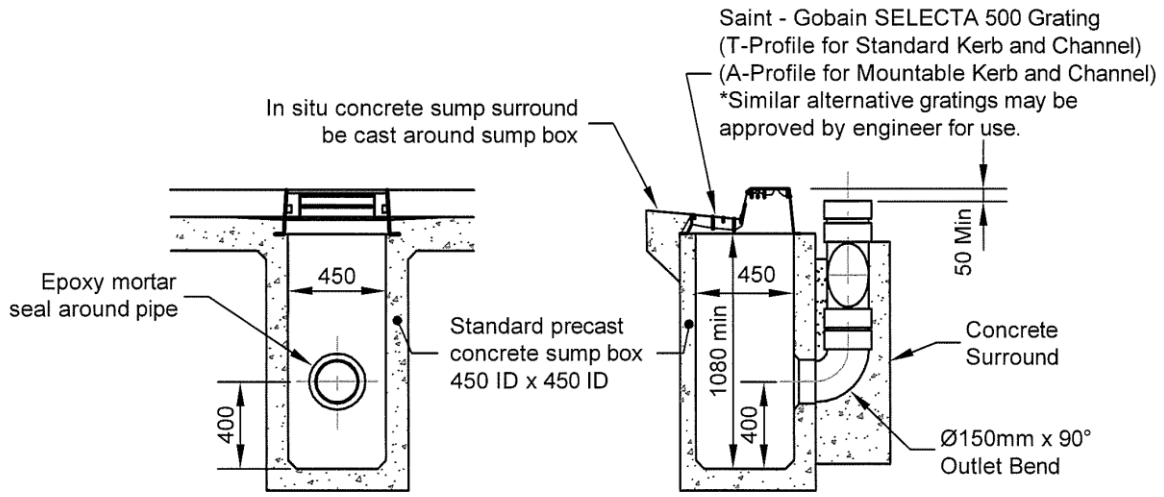

SECTION 'A - A' **SECTION 'B - B'**

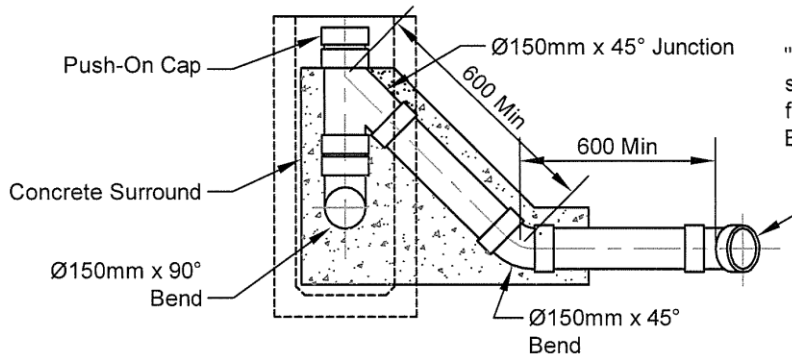

"Back Entry" Connection shown. Connection can be fitted R.H. or L.H. by the Engineer.

Detail of connection at back of sump

Notes.
1. Concrete to be high grade 17.5 min MPa to N.Z.S. 3104
2. Compacted granular bedding and surround to AS/NZS 2566.2

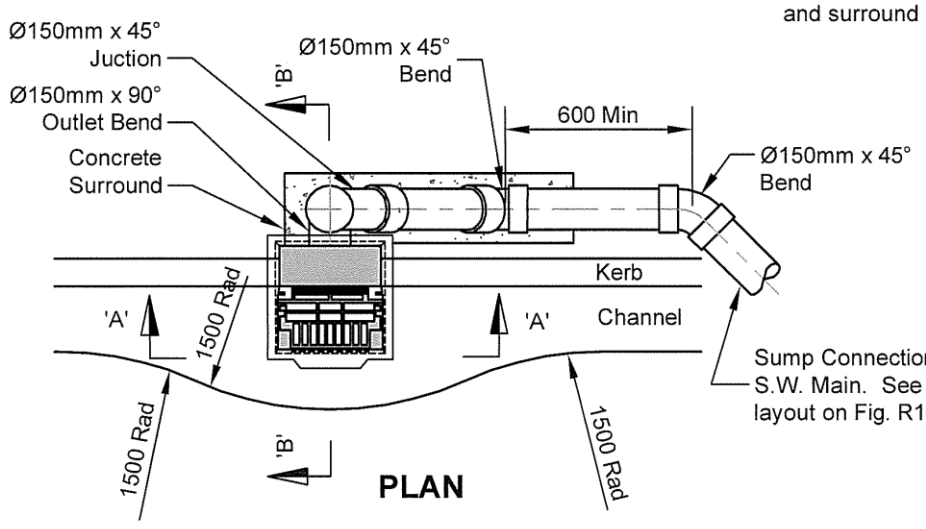

PLAN

Not to scale

Invercargill CITY COUNCIL	**STORMWATER ROAD SUMP**	Fig. R13A Rev. 3 Date 3/10

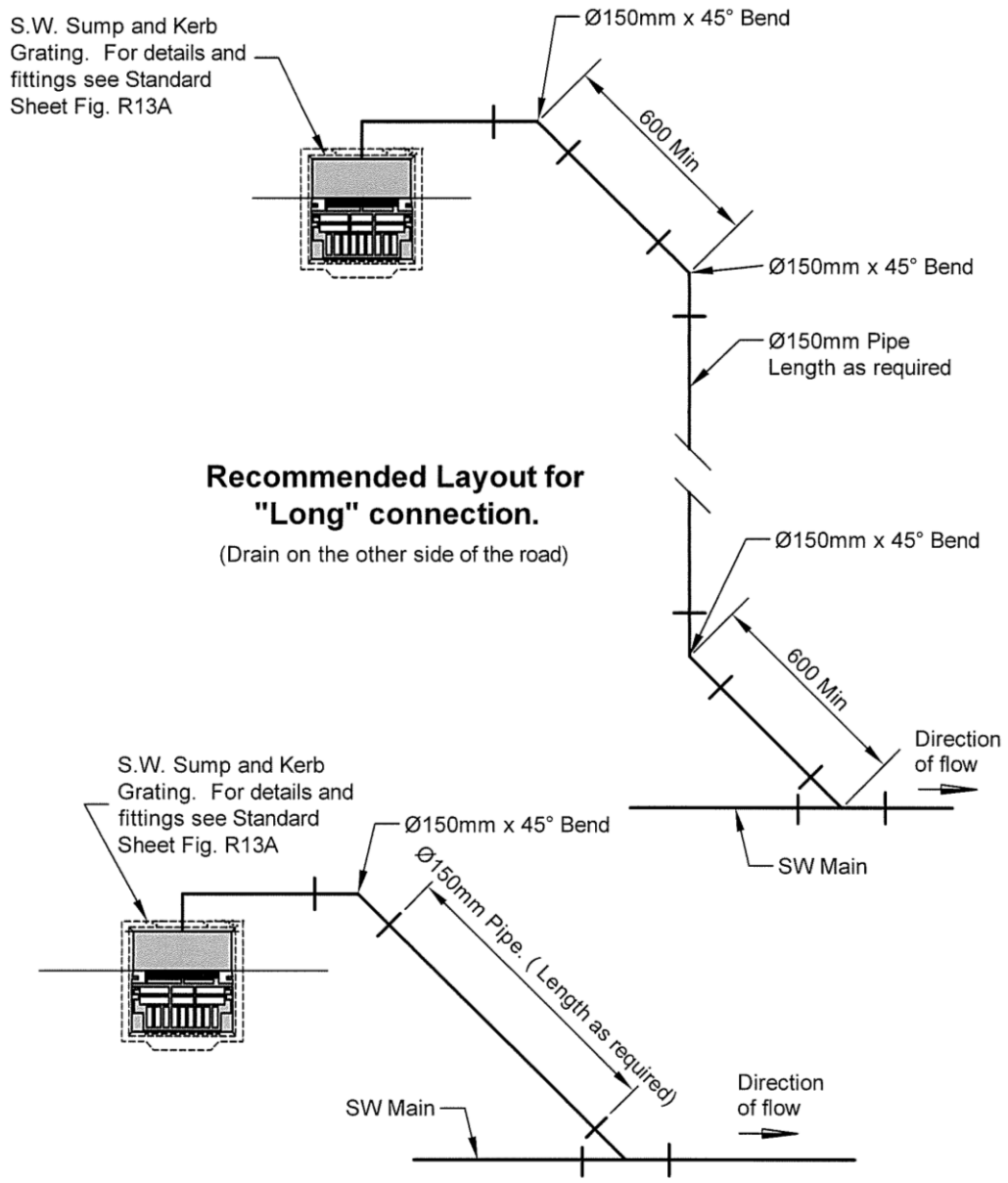

Recommended Layout for "Long" connection.

(Drain on the other side of the road)

Notes.

1. "Back Entry" type sump connection shown. Position may vary as required by the Engineer.
2. Compacted granular bedding and surround to AS/NZS 2566.2

Recommended Layout for "Short" Connection

(Drain on the other side of the road)

Not to scale

Invercargill CITY COUNCIL	RECOMMENDED SUMP CONNECTIONS TO STORMWATER MAIN	Fig. R16 Rev. 3 Date 7/08

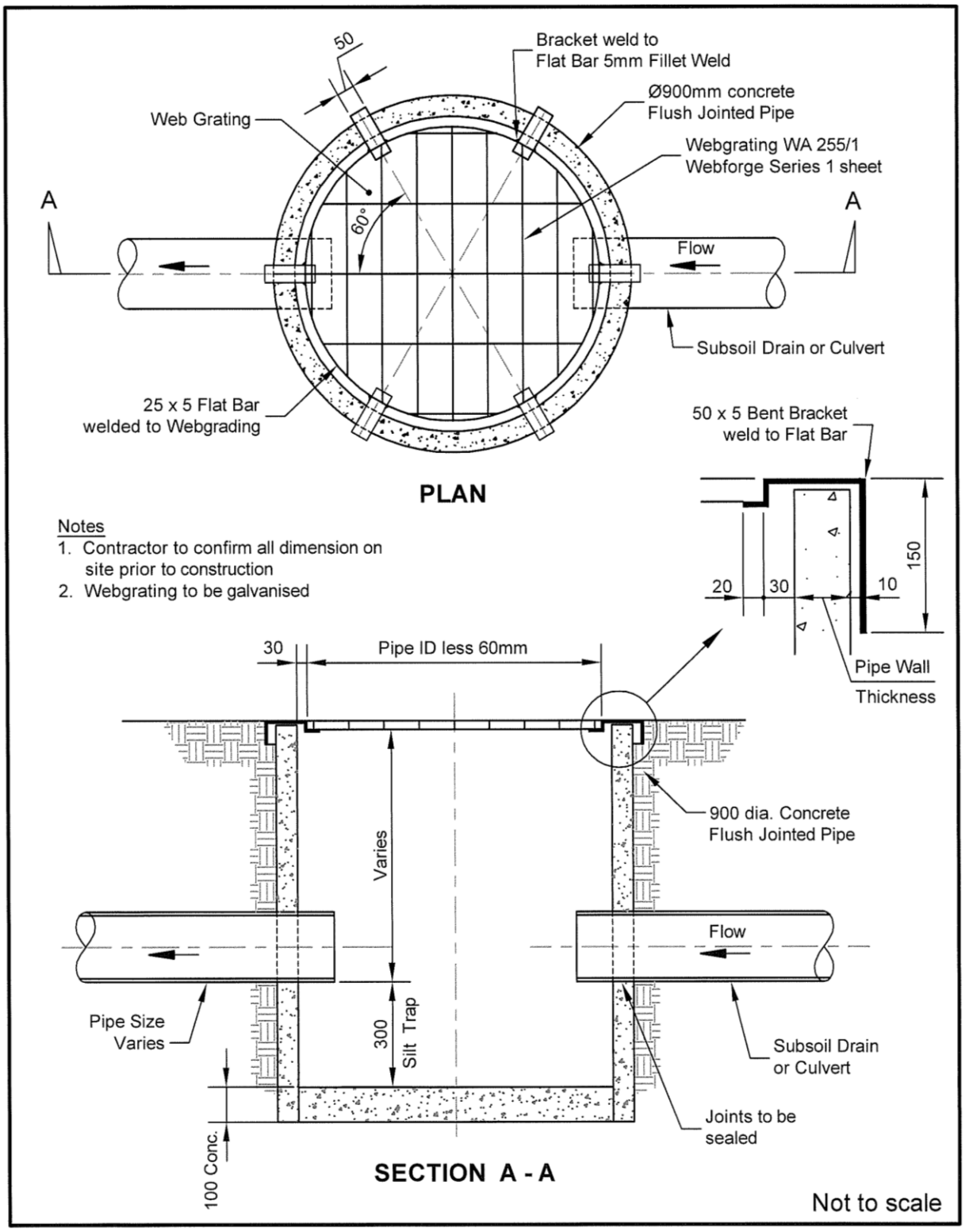

Invercargill CITY COUNCIL	**STANDARD RURAL SUMP MANHOLE / BLOWHOLE WITH WEBGRATING**	Fig. R17 Rev. 4 Date 7/08

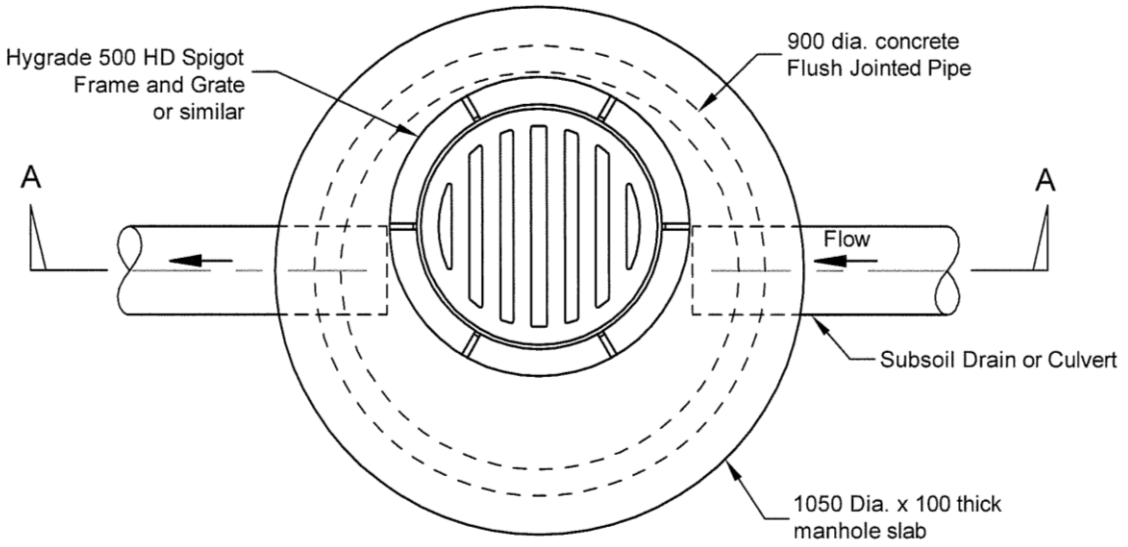

PLAN

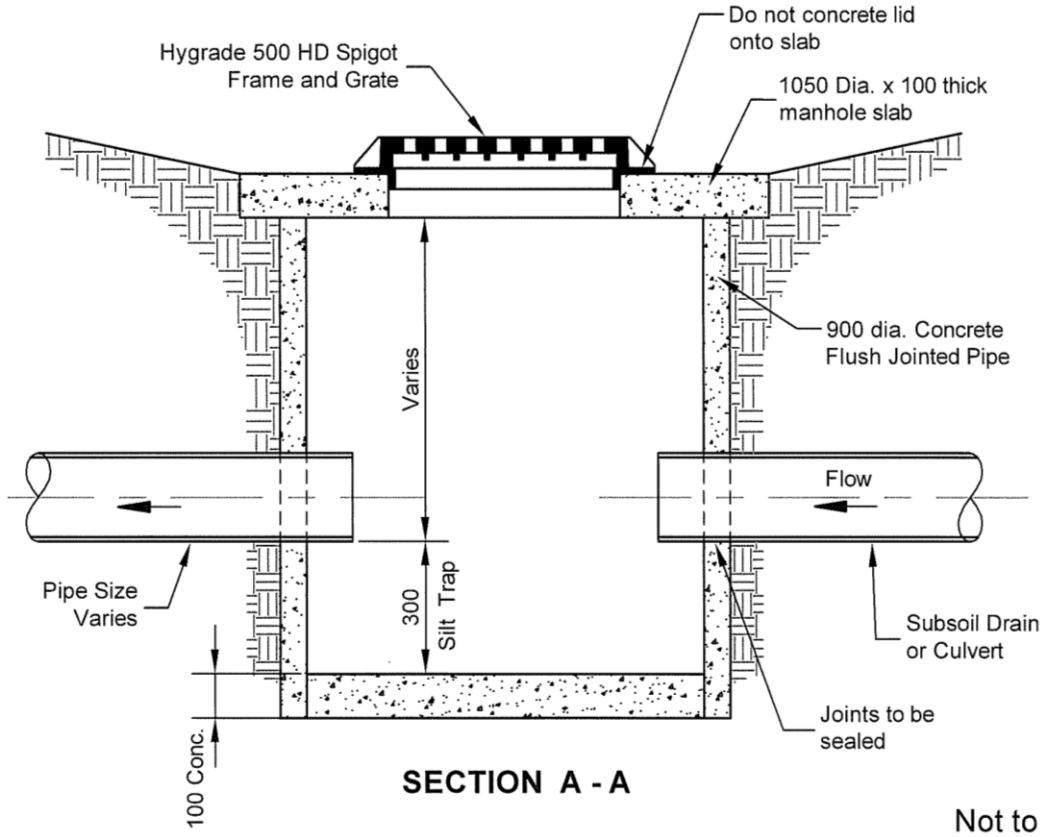

SECTION A - A

Not to scale

Invercargill CITY COUNCIL	**STANDARD RURAL SUMP MANHOLE / BLOWHOLE WITH CAST IRON SUMP GRATE AND FRAME**	Fig. R17A Rev. 2 Date 3/08

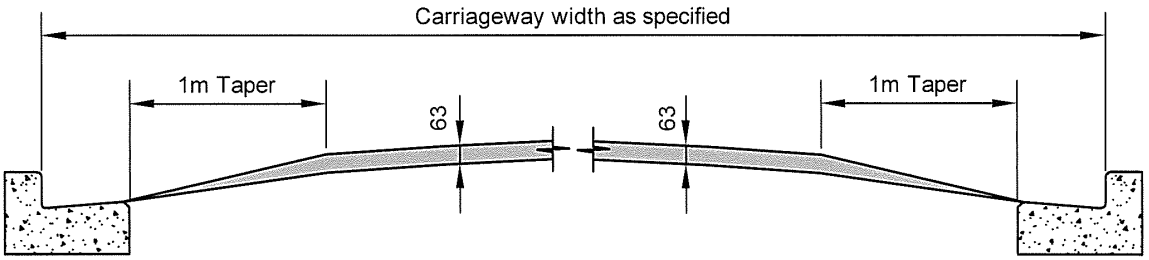

ROAD HUMP SECTION

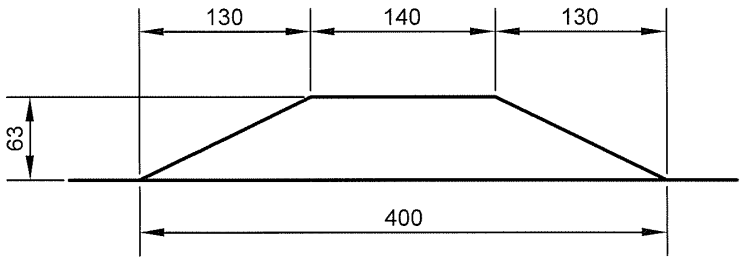

SECTION
FOR SMALL PROFILE HUMP

Not to scale

Invercargill CITY COUNCIL	**ASPHALT ROAD HUMP DETAIL**	Fig. R20 Rev. 3 Date 3/08

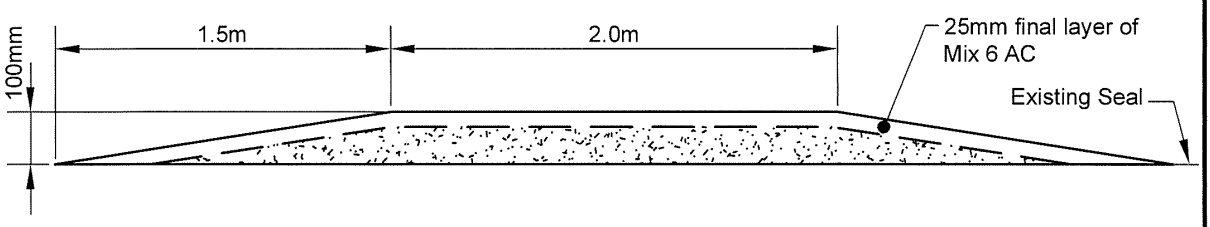

ASPHALT PLATFORM (TYPE 'A')

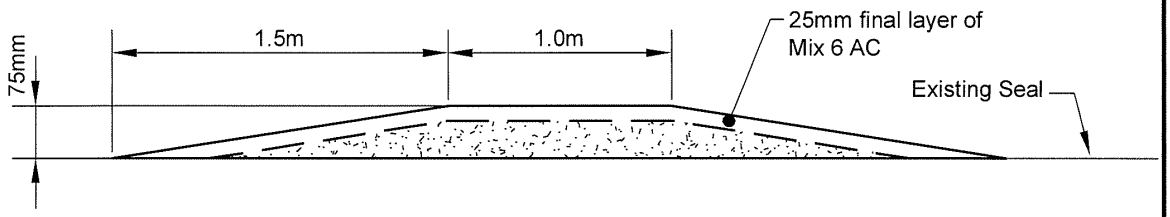

ASPHALT PLATFORM (TYPE 'B')

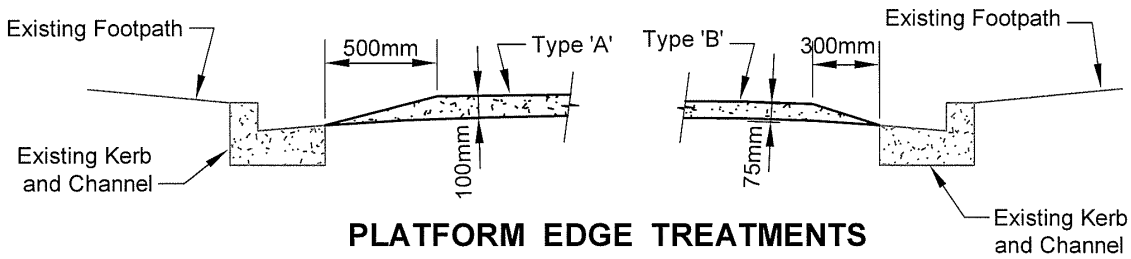

PLATFORM EDGE TREATMENTS

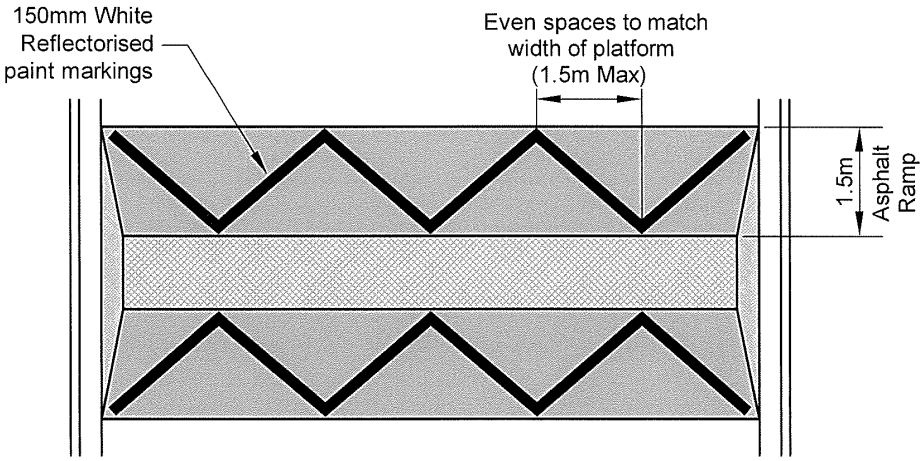

RAMP ROAD PAINT MARKINGS

Not to scale

Invercargill CITY COUNCIL	**ASPHALT ROAD PLATFORM DETAIL**	Fig. R20A Rev. 2 Date 7/08

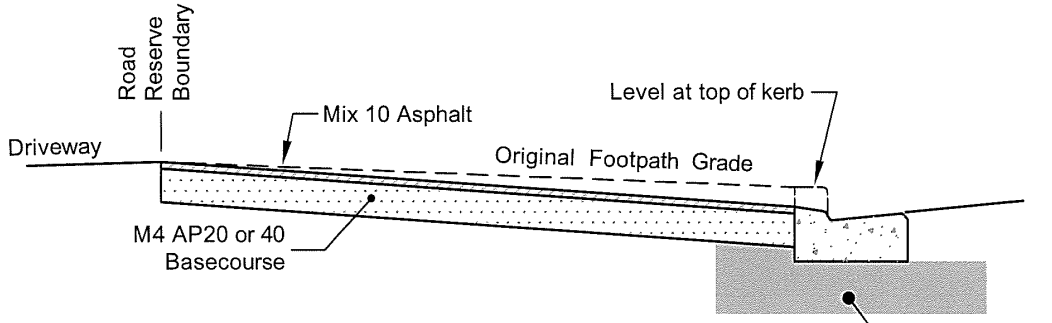

	Residential	Heavy Duty
Asphalt Depth	25mm	50mm average
Basecourse Depth	125mm min.	150mm min.

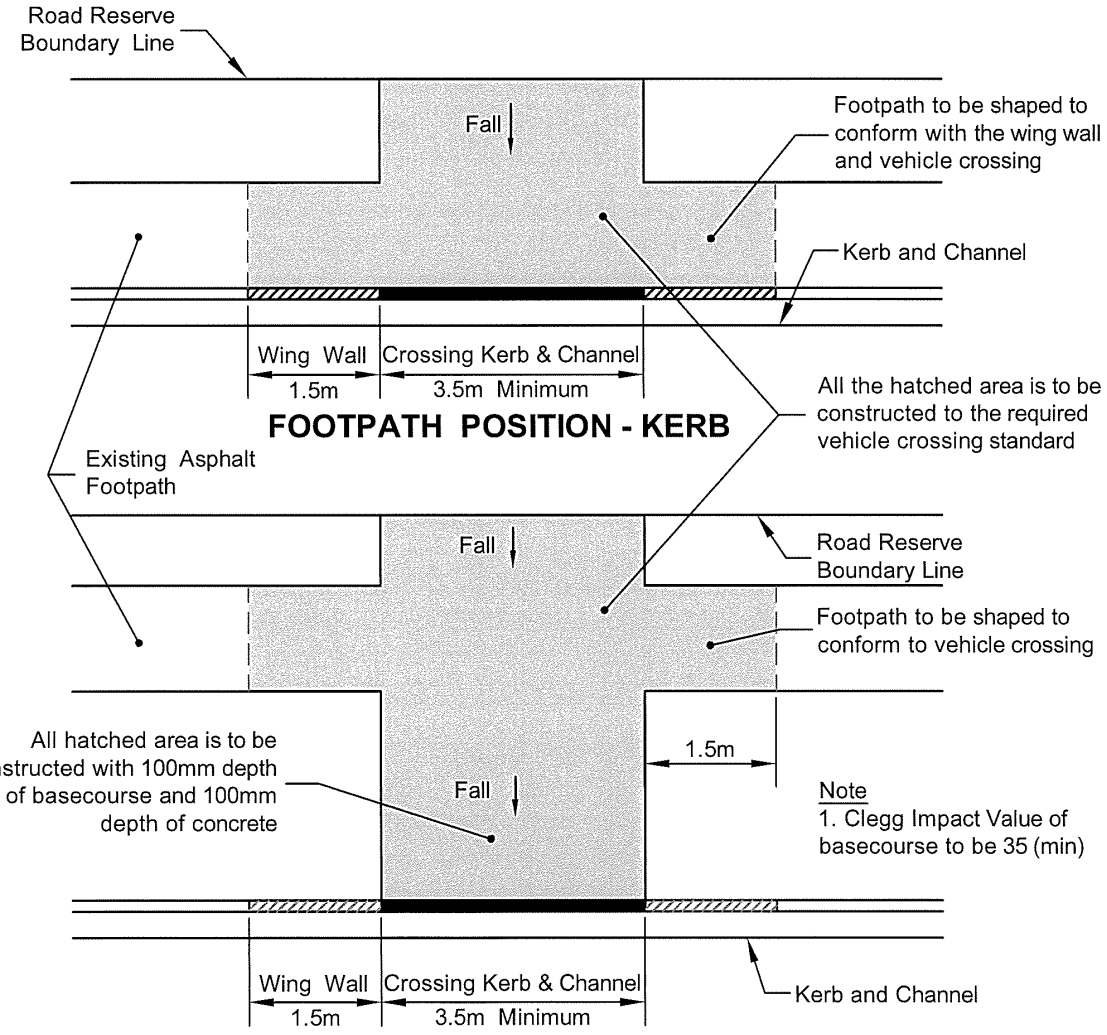

FOOTPATH POSITION - KERB

FOOTPATH POSITION - BOUNDARY

Not to scale

Invercargill CITY COUNCIL	**STANDARD VEHICLE CROSSING CONSTRUCTION DETAILS**	Fig. R21 Rev. 6 Date 2/13

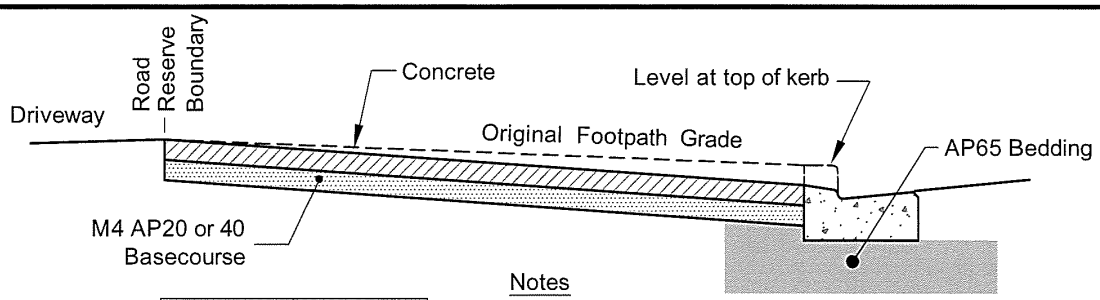

	Residential	Heavy Duty
Concrete Depth	100mm min	150mm min
Basecourse Depth	100mm min	100mm min

Notes

1. All Heavy Duty concrete (including the wing wall areas) to be reinforced with 665 mesh. Mesh to be overlapped by 200mm minimum at joints and laced together with wire.
2. All concrete to be 30MPa min certified concrete to NZS 3104.
3. Clegg Impact Value of basecourse to be 35 (min)

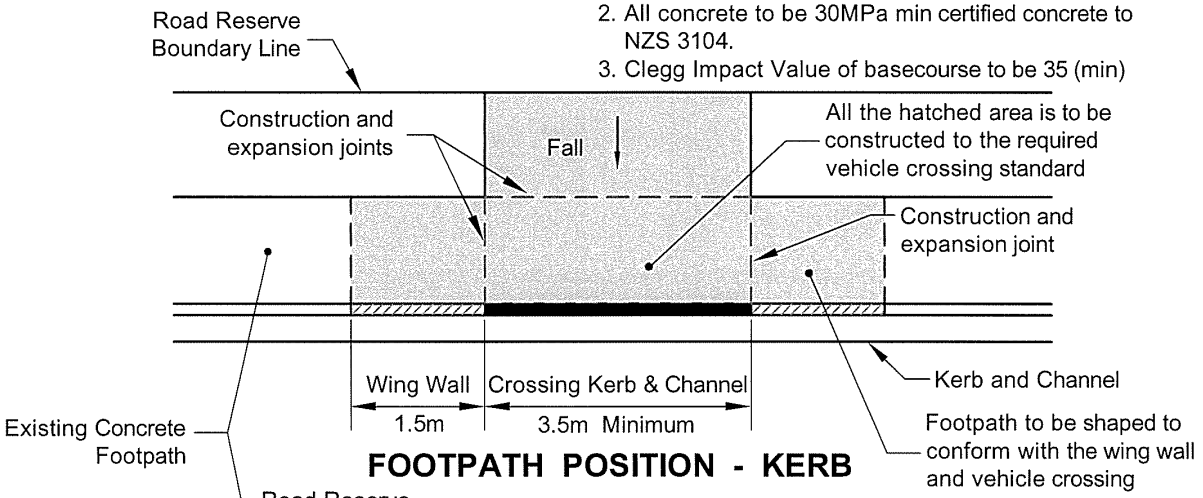

FOOTPATH POSITION - KERB

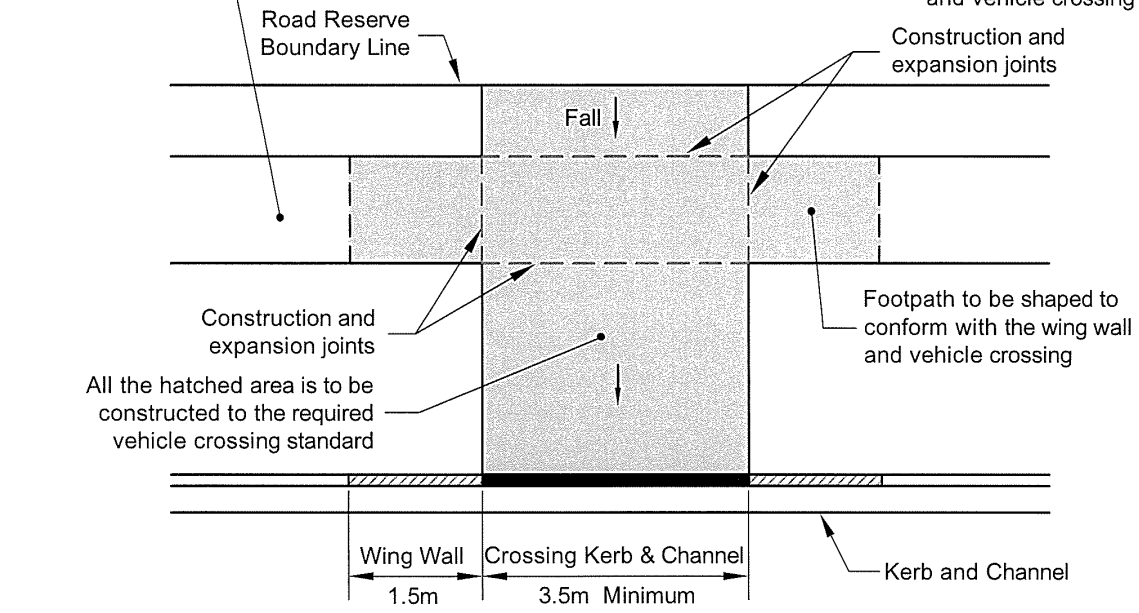

FOOTPATH POSITION - BOUNDARY

Not to scale

Invercargill CITY COUNCIL	STANDARD CONCRETE VEHICLE CROSSING CONSTRUCTION DETAILS	Fig. R22 Rev. 6 Date 2/13

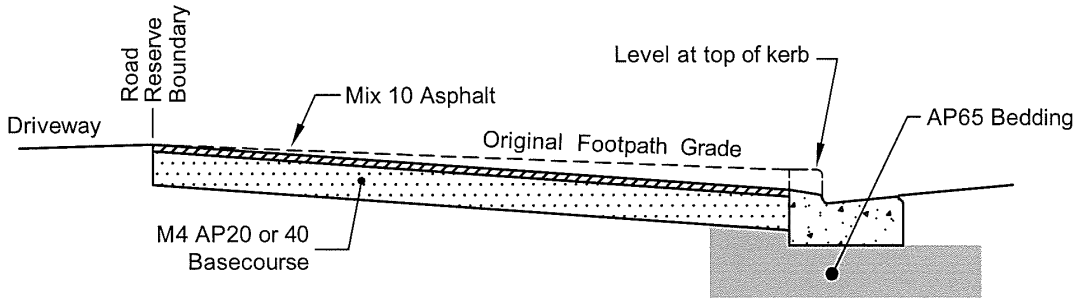

	Residential	Heavy Duty
Asphalt Depth	25mm	50mm
Basecourse Depth	125mm min.	150mm min.

Note
1. Clegg Impact Value of basecourse to be 35 (min)

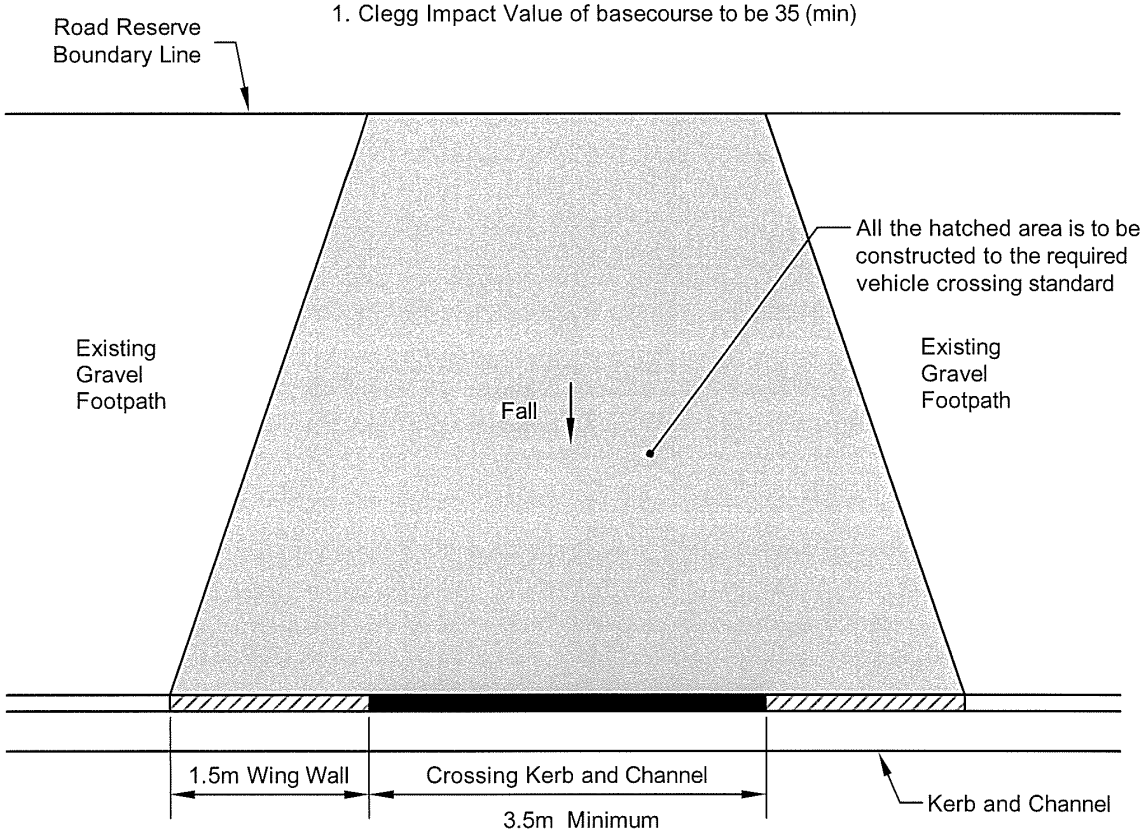

Not to scale

Invercargill City Council	STANDARD VEHICLE CROSSING CONSTRUCTION DETAILS FOR GRAVEL FOOTPATHS	Fig. R23 Rev. 6 Date 2/13

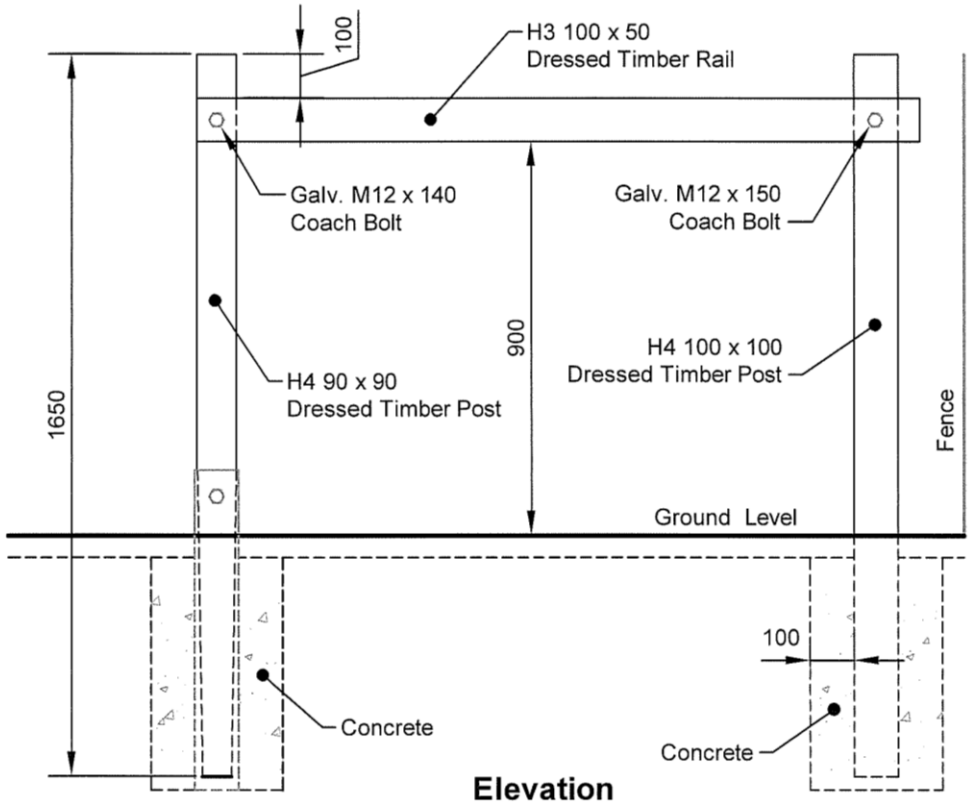

Elevation

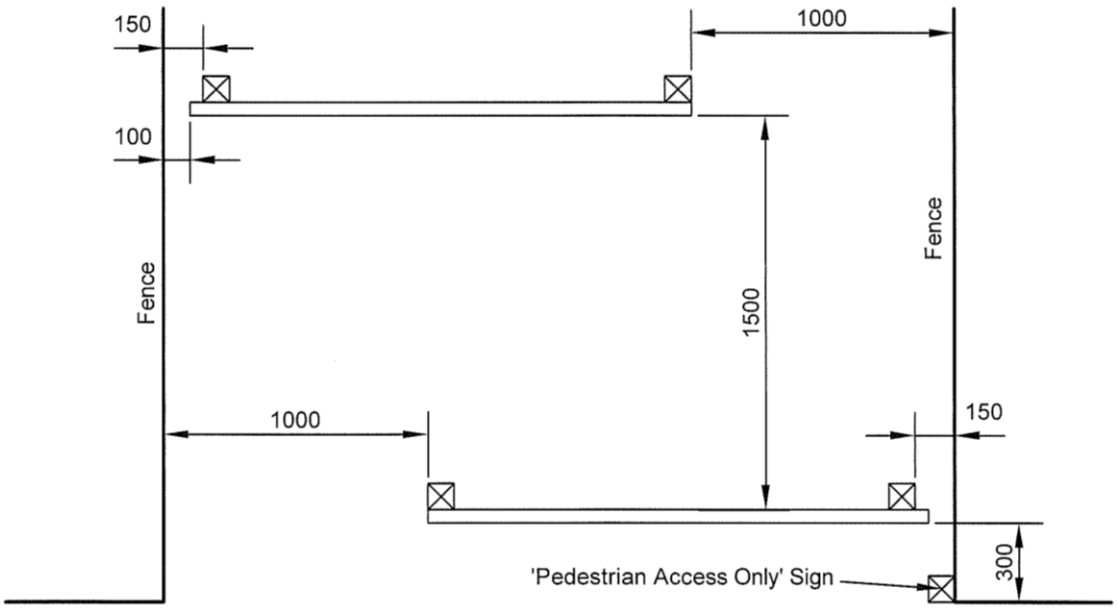

Plan

Not to scale

Invercargill City Council	**Typical Details. Removable Pedestrian Barrier - 1**	Fig. R24 Rev. 1 Date 1/04

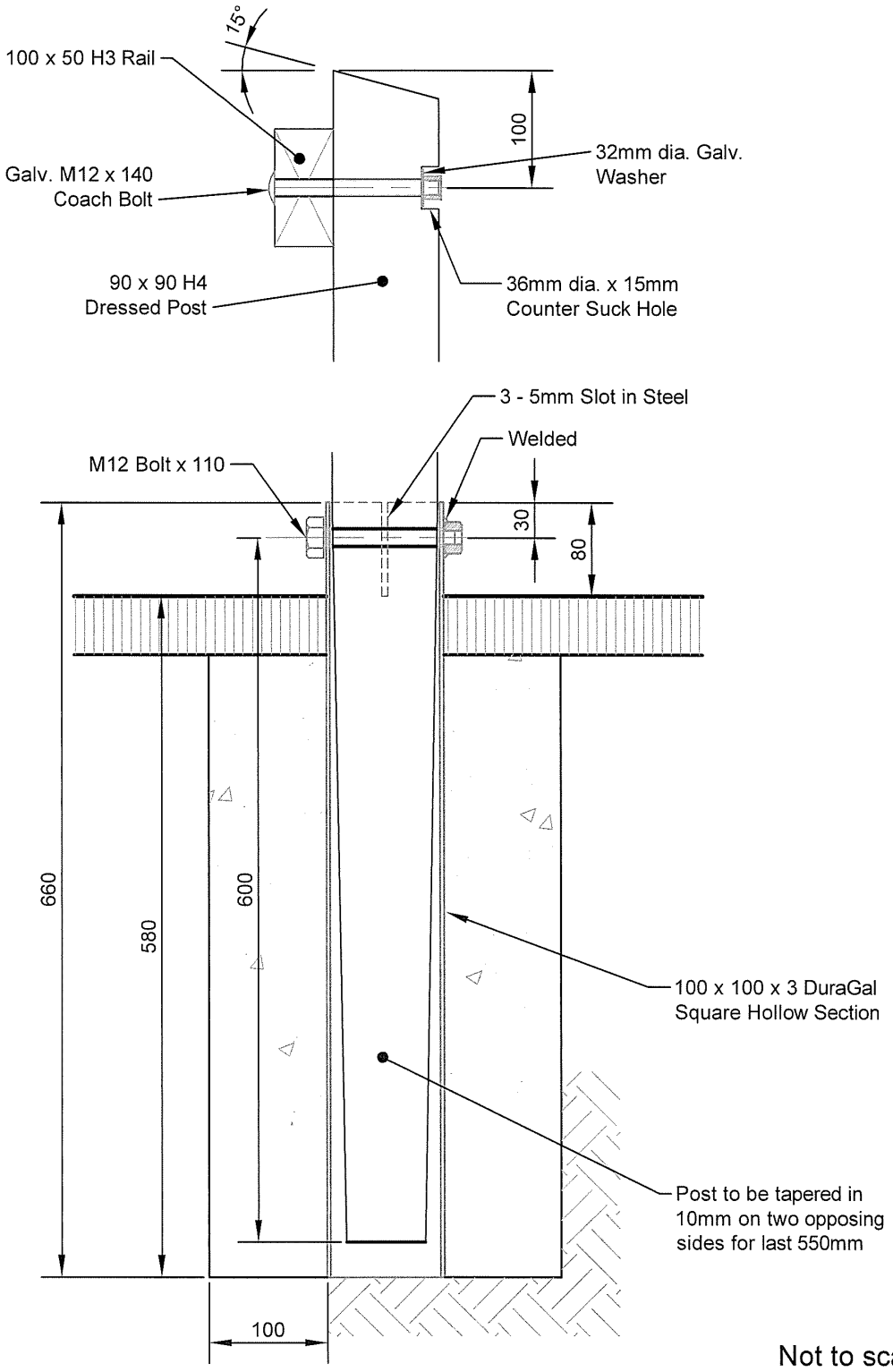

Invercargill CITY COUNCIL	**Typical Details. Removable Pedestrian Barrier - 2**	Fig. R25 Rev. 1 Date 1/04

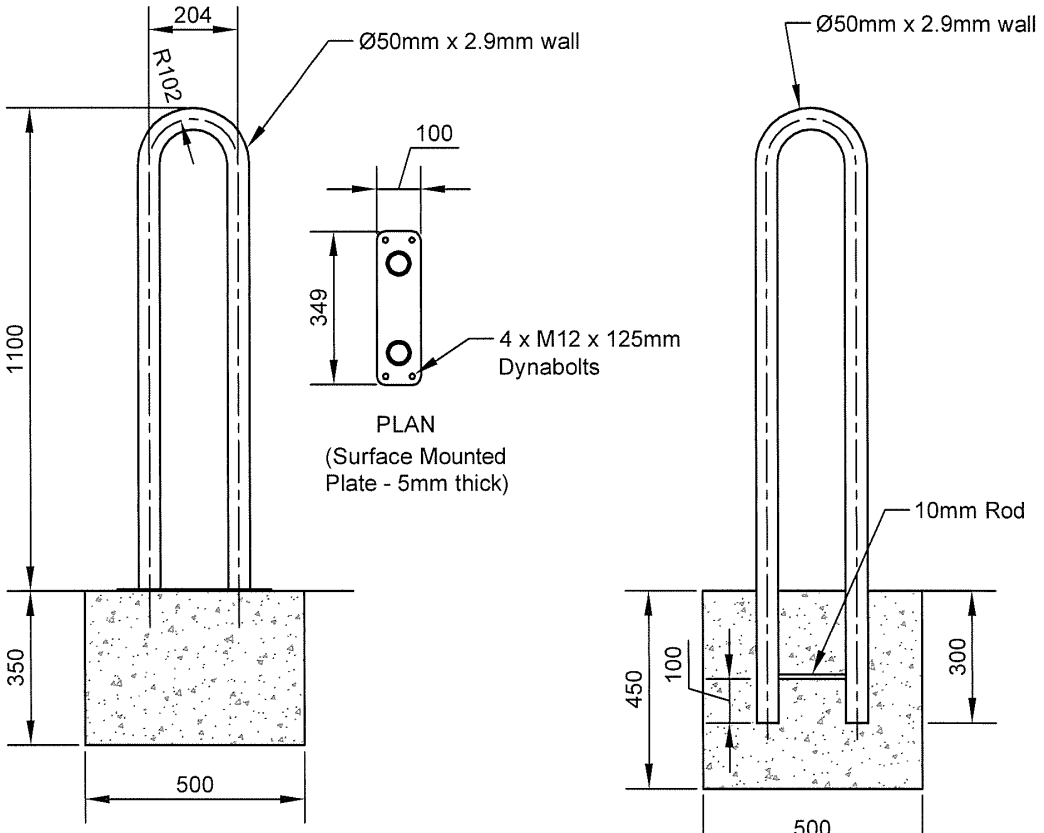

Product Specifications

1. Hot dip galvanised to AS/NZS 4680 (1999). Exterior Polyester Powder Coat Finish. (Resene Erode Claret) or
2. 316 Stainless Steel finished with 320 Grit abrasive and electropolished.

Not to scale

Invercargill CITY COUNCIL	**CYCLE STAND**	Fig. R26 Rev. 2 Date 7/08

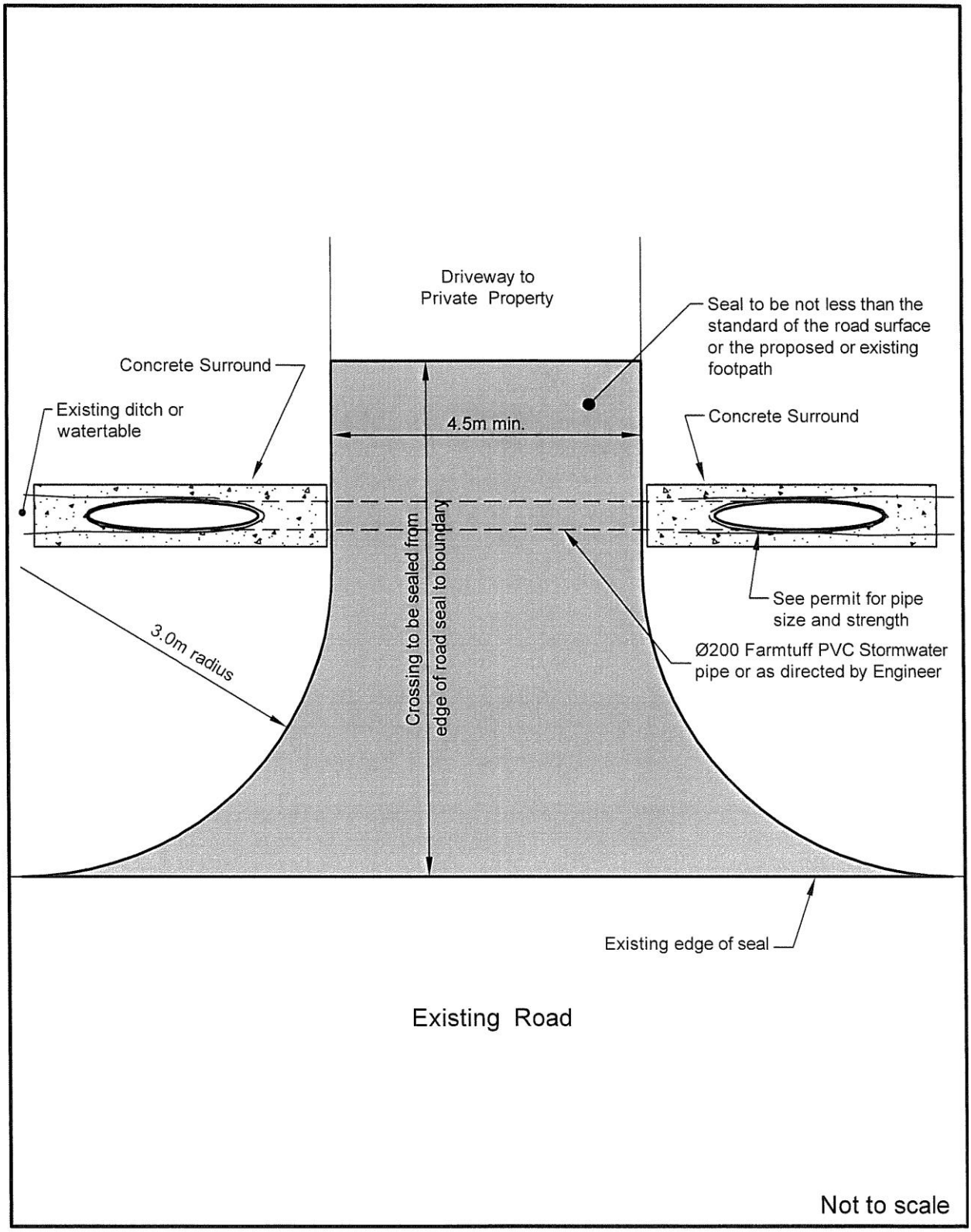

Invercargill CITY COUNCIL	RURAL ACCESSWAY LAYOUT	Fig R28 Rev 4 Date 7/12

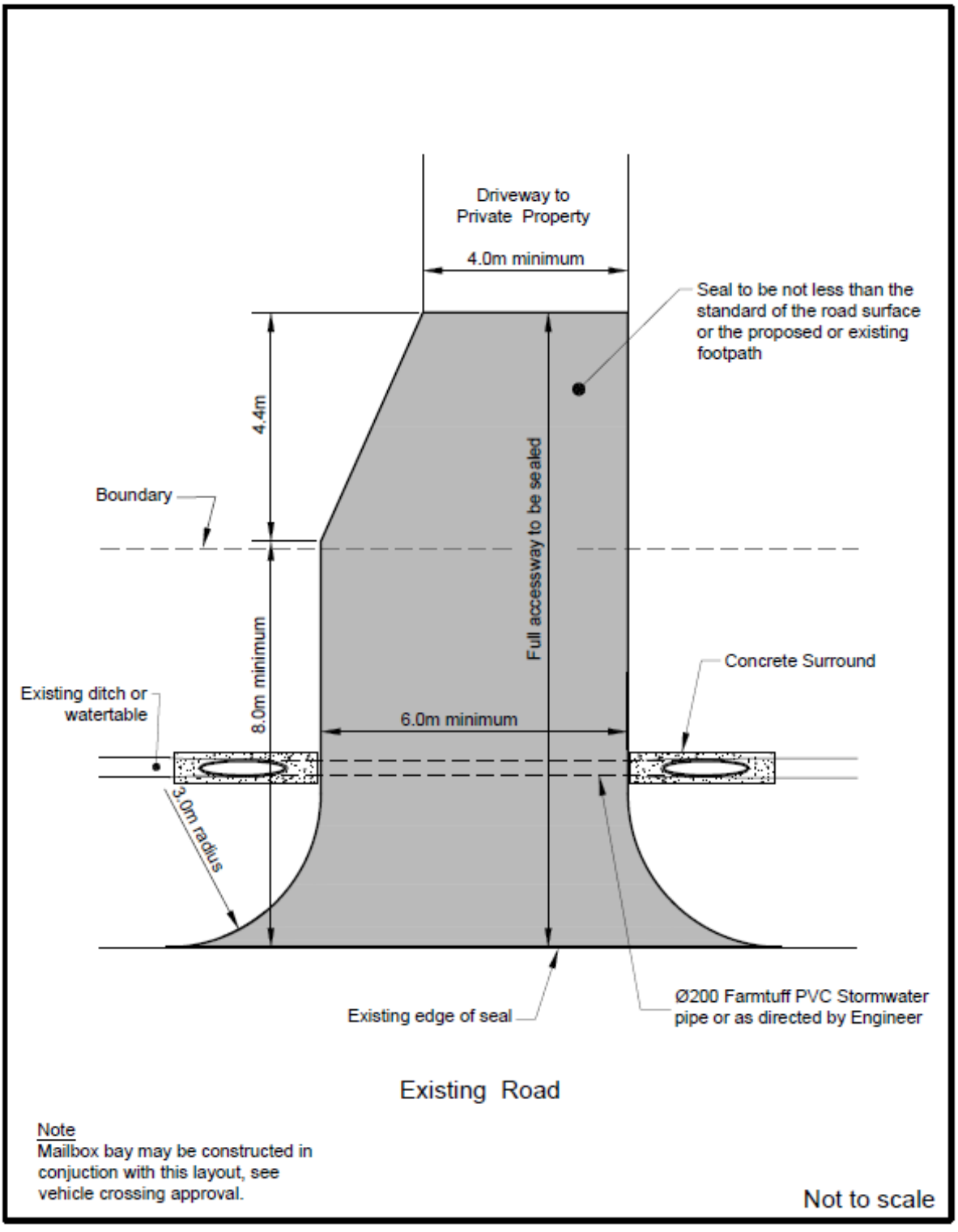

Invercargill CITY COUNCIL	RURAL ACCESSWAY LAYOUT (Two to six dwellings)	Fig R28B Rev 1 Date 10/14

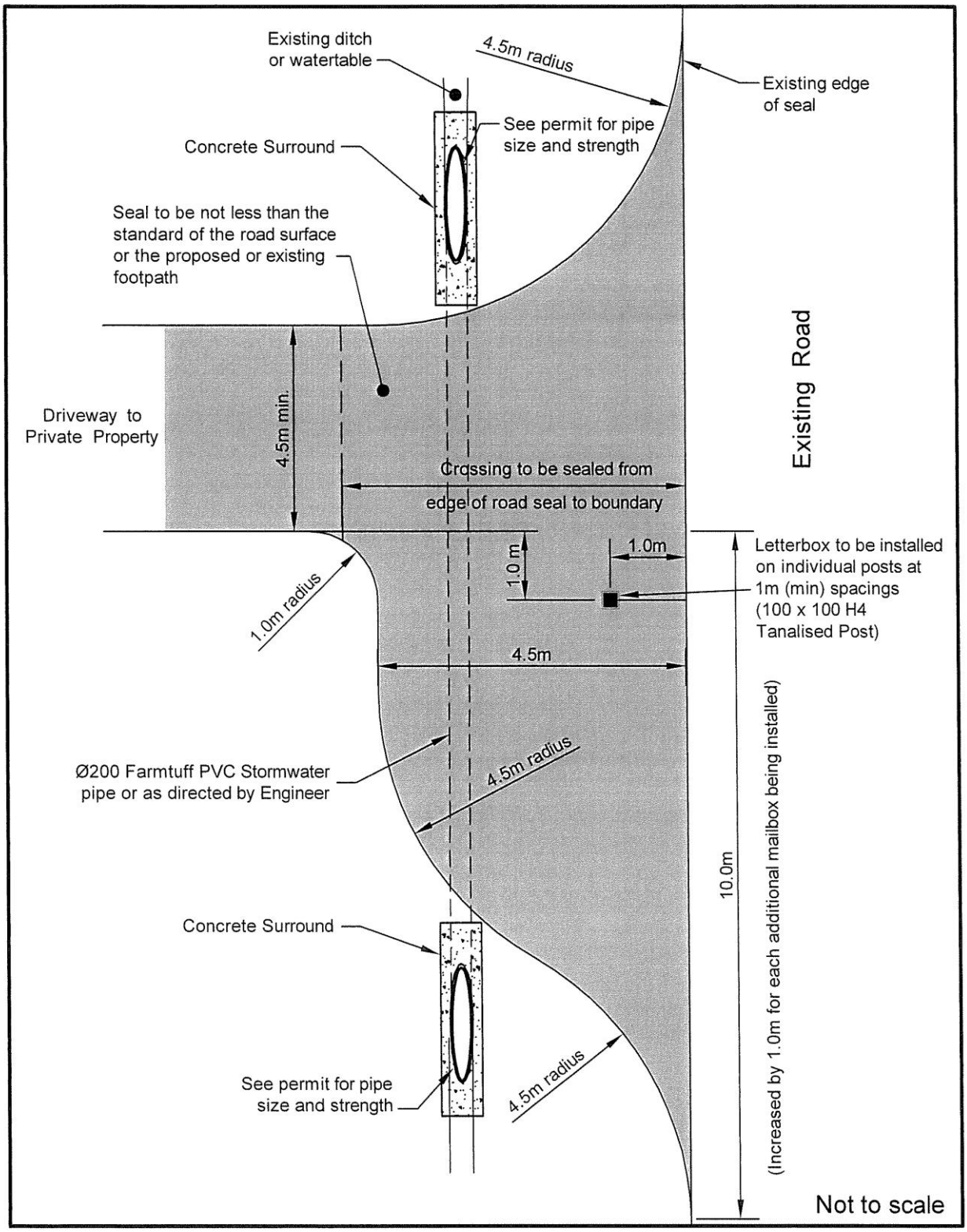

Invercargill CITY COUNCIL	RURAL ACCESSWAY LAYOUT WITH LETTER BOX	Fig R29 Rev 8 Date 7/12

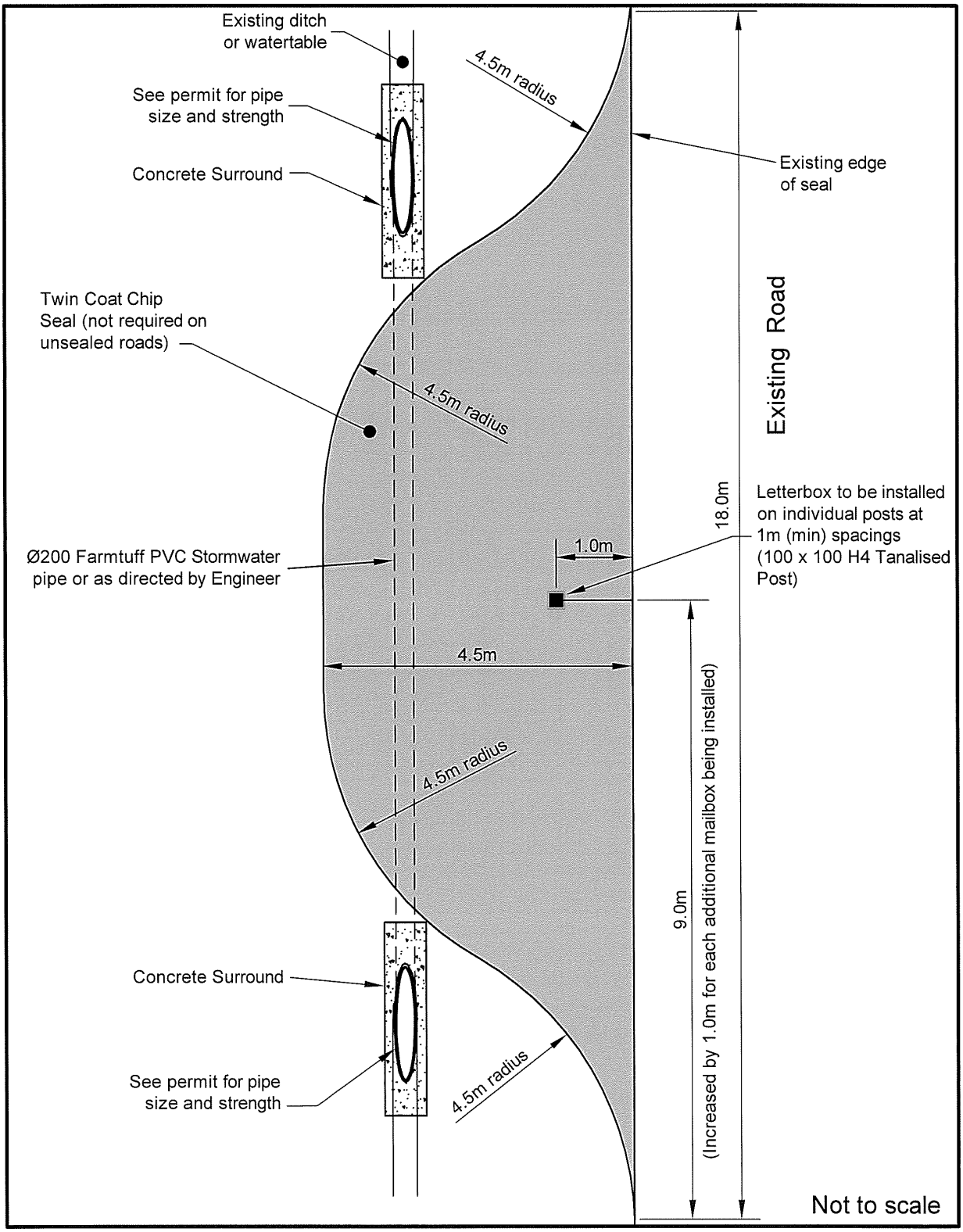

Invercargill CITY COUNCIL	RURAL LETTERBOX ACCESSWAY LAYOUT	Fig R29A Rev 5 Date 7/08

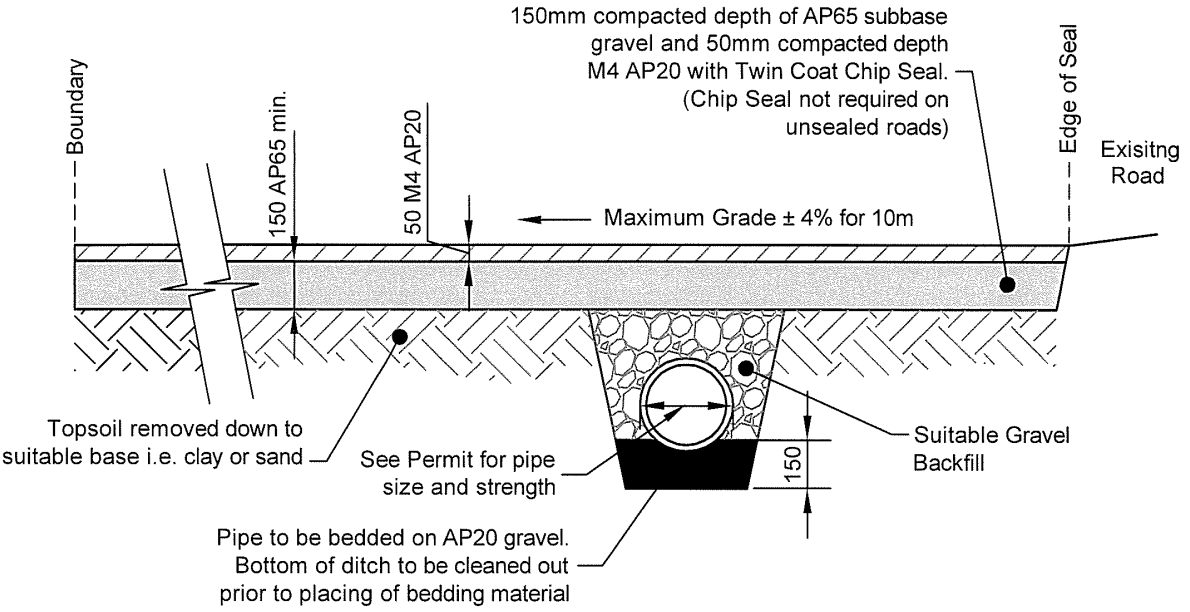

CROSS SECTION

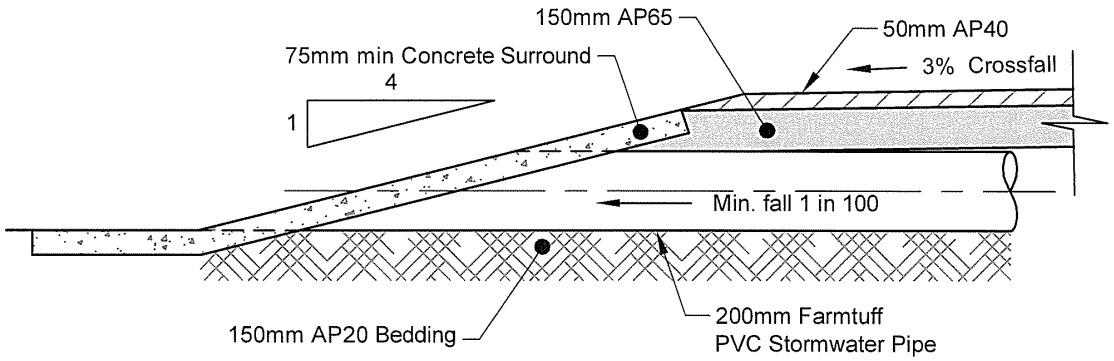

CULVERT PIPE END DETAIL

Note
1. Culvert pipe diameters for ditches shall be specified on rural accessway permit by engineer.

Not to scale

Invercargill CITY COUNCIL	TYPICAL CONSTRUCTION DETAILS FOR RURAL ACCESSWAY	Fig R30 Rev 5 Date 7/08

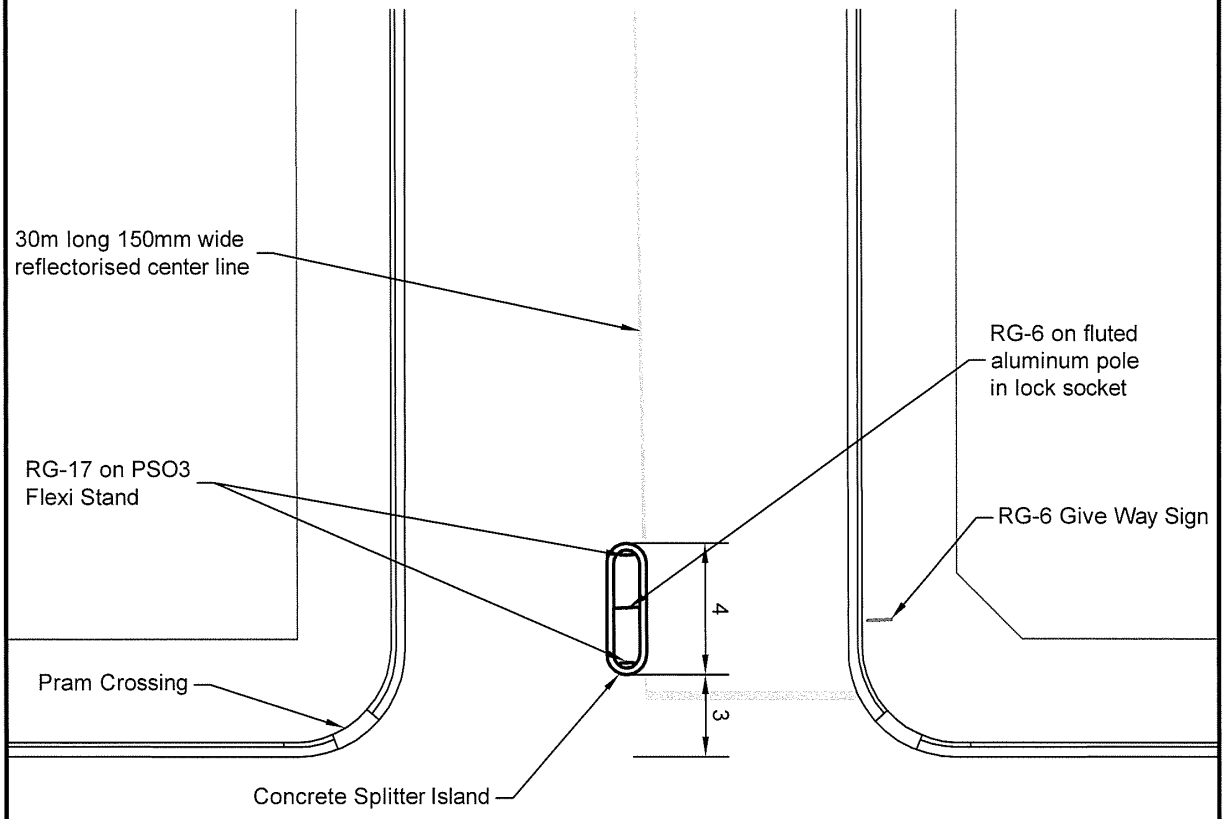

Note: All existing markings not conforming to the above layout to be sand blasted off.

PLAN

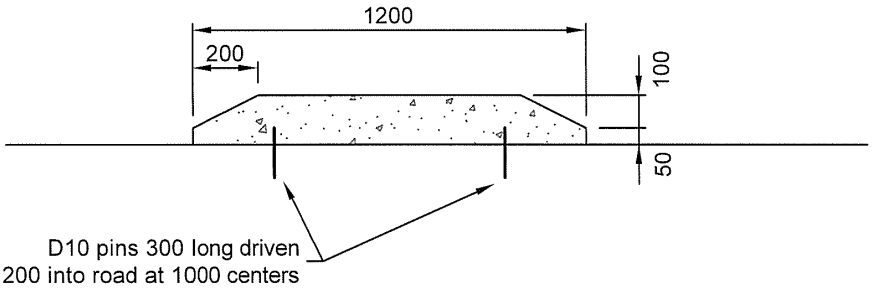

Note
1. All Concrete to be 20MPa min certified concrete to NZS 3104.

SPLITTER ISLAND
CROSS SECTION

Not to scale

Invercargill CITY COUNCIL	**INTERSECTION** **SPLITTER ISLAND DETAILS**	Fig. R31 Rev. 4 Date 7/08

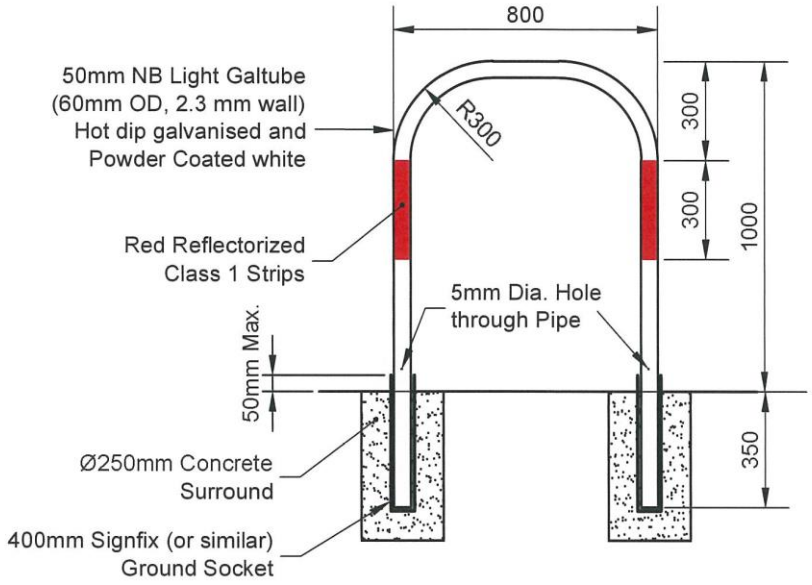

Cycle Holding Rail

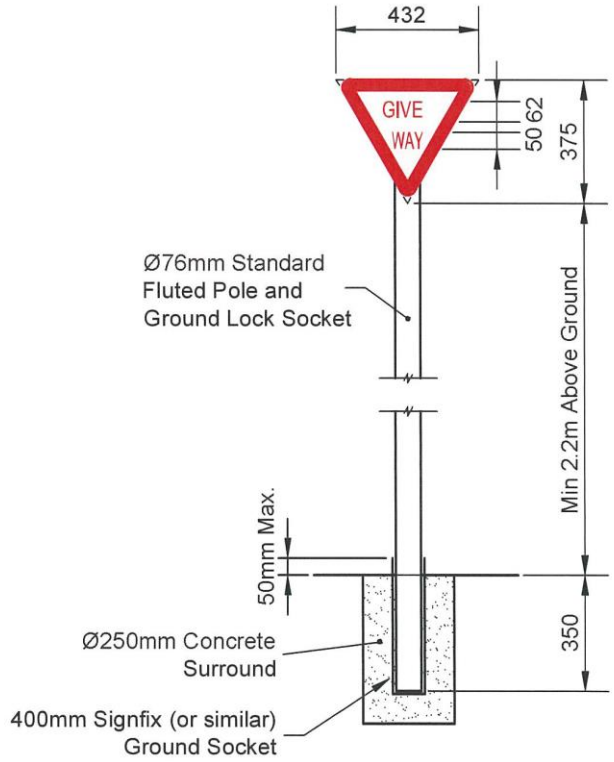

Not to scale

Invercargill CITY COUNCIL	**Cycle Holding Rail / Give Way Sign**	Fig. R37 Rev. 2 Date 12/11

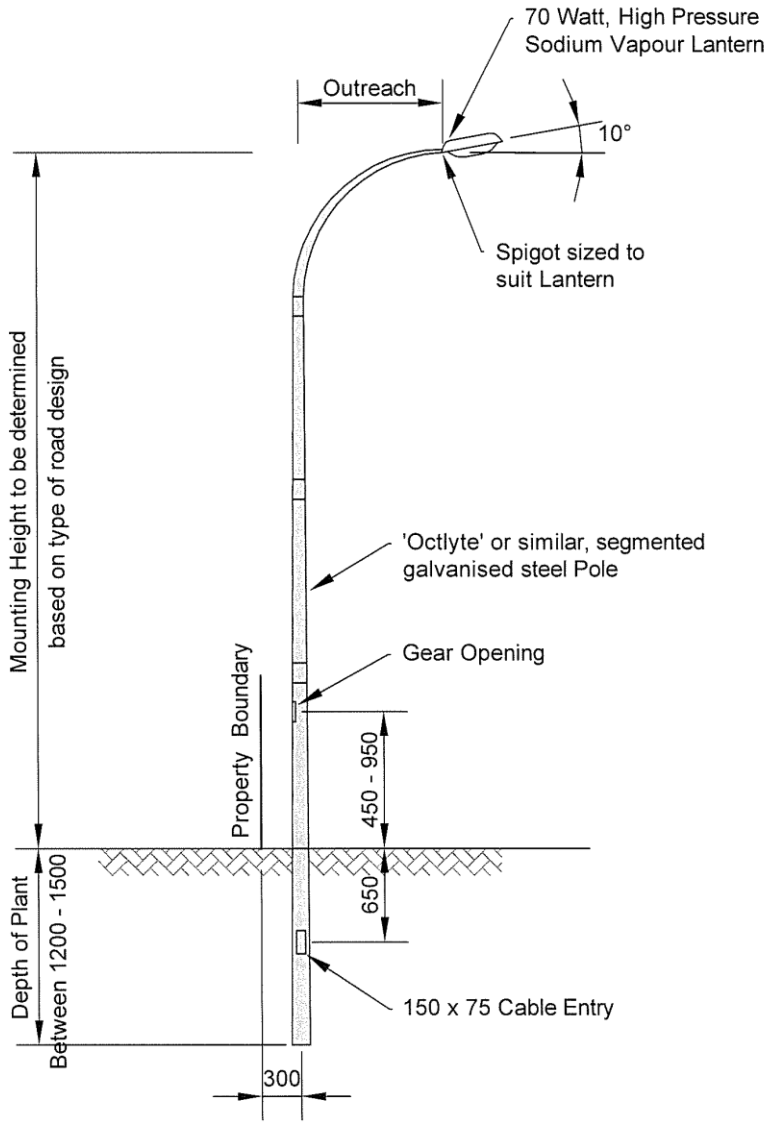

Note - Standard detail to be used in conjunction with AS/NZS 1158

Not to scale

Invercargill CITY COUNCIL	**STREET LIGHTING** **STANDARD GROUND PLANTED COLUMNS**	Fig. R41 Rev. 1 Date 7/12

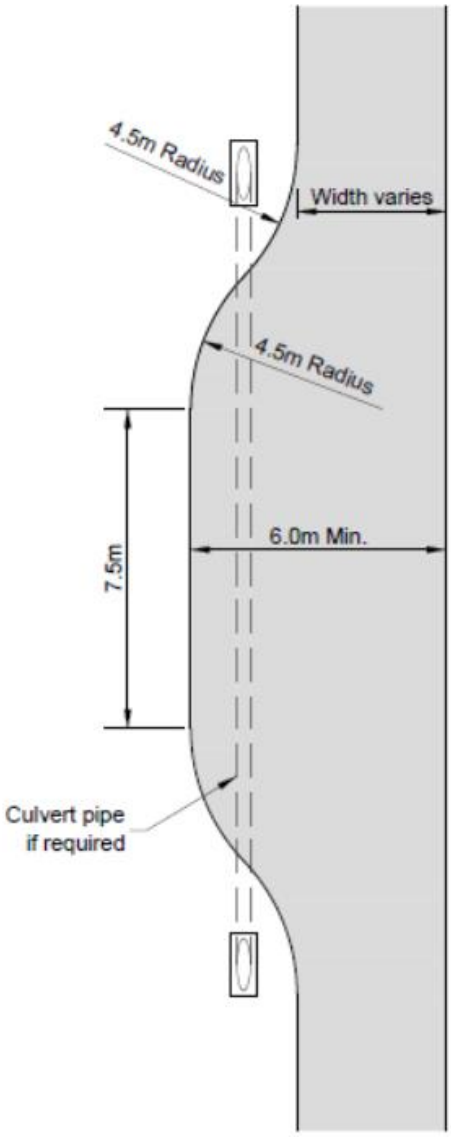

Not to scale

Invercargill CITY COUNCIL	**Passing Bay Detail**	Fig. R44 Rev. 1 Date 10/14

Note
Concrete surround to extend
300mm beyond cylinder

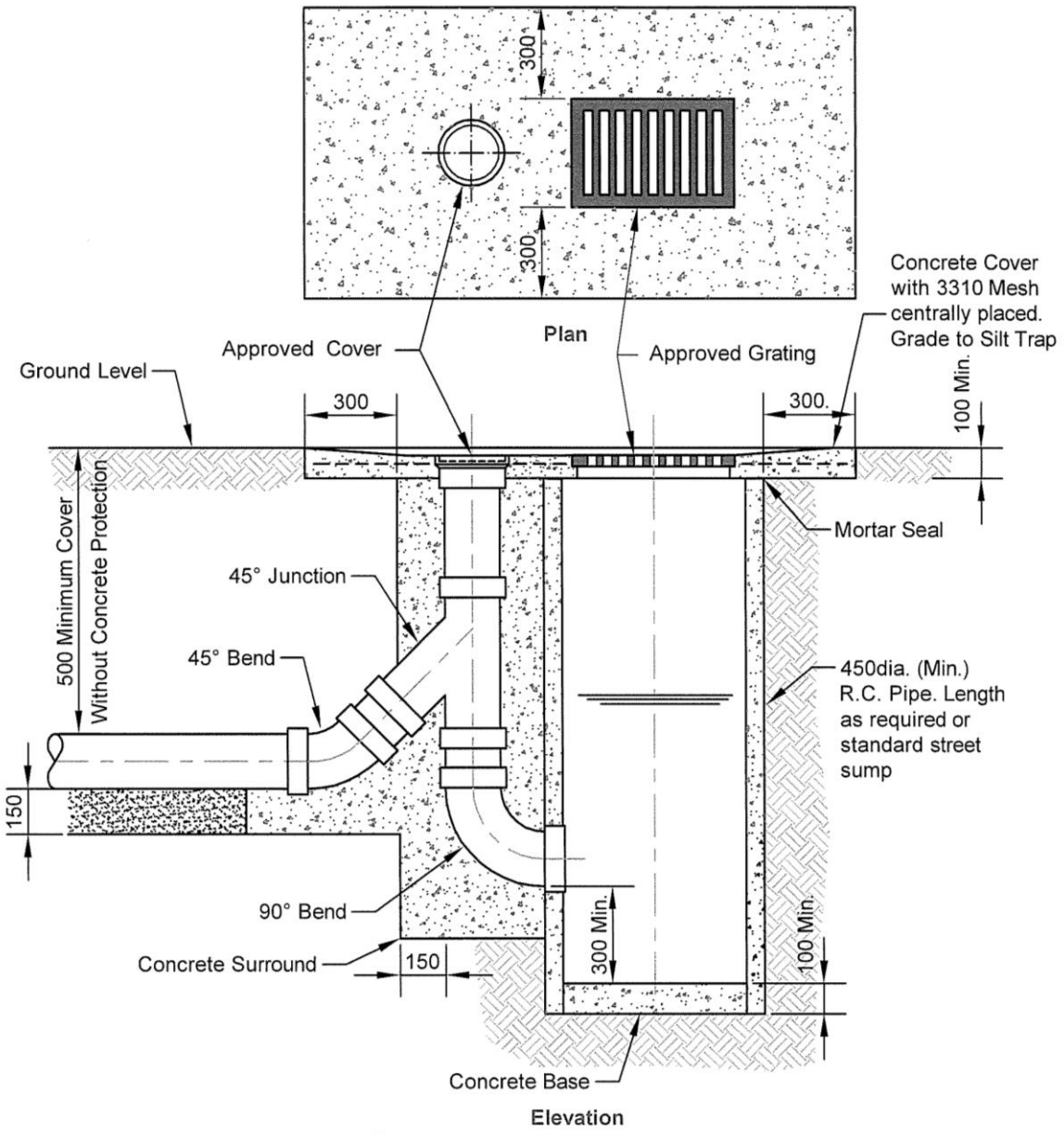

Notes.
Concrete to be high grade 17.5 MPa to N.Z.S. 3104 Compacted granular bedding and surrounded to A.S./N.Z.S. 2566.2.

Not to scale

Invercargill CITY COUNCIL	STANDARD SILT TRAP WITH CLEANING EYE	Fig. D1 Rev. 4 Date 9/08

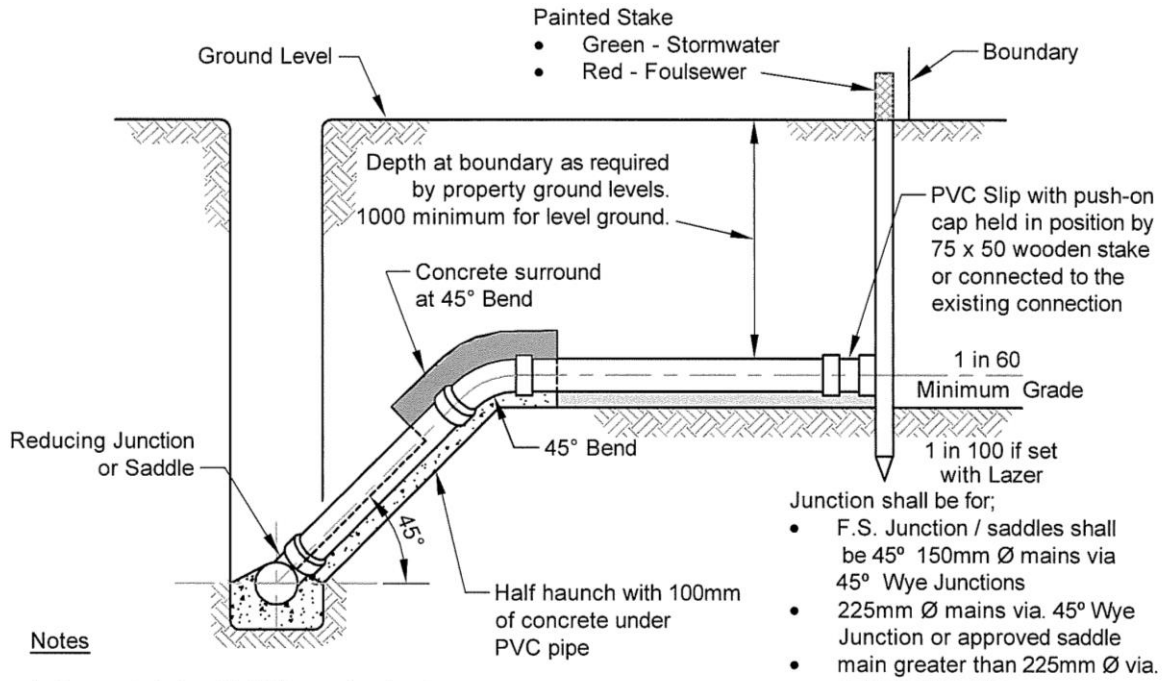

Junction shall be for;

- F.S. Junction / saddles shall be 45° 150mm Ø mains via 45° Wye Junctions
- 225mm Ø mains via. 45° Wye Junction or approved saddle
- main greater than 225mm Ø via. approved saddle
- Main greater than 300mm Ø may use 90° Junction or Saddles

Notes

1. Concrete to be 17.5MPa conforming to to NZS 3104 and placed and compacted in accordance to NZS 3109.
2. No concrete to be placed against uncompacted fill.
3. Miniumum length of straight pipe between all bend shall be:
   100 mm Ø pipe - 300 mm.
   150 mm Ø pipe - 600 mm.

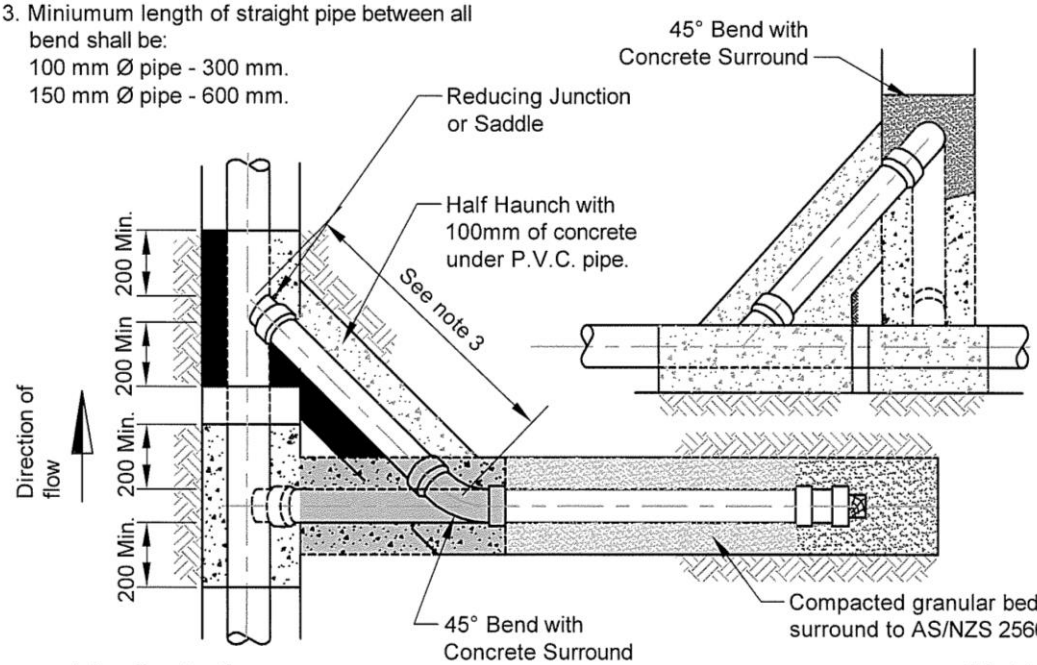

Approved for Construction

Not to scale

Invercargill CITY COUNCIL	100 / 150 dia. u.P.V.C. Standard Connection showing Inclined Riser	Fig. D3 Rev. 5 Date 9/08

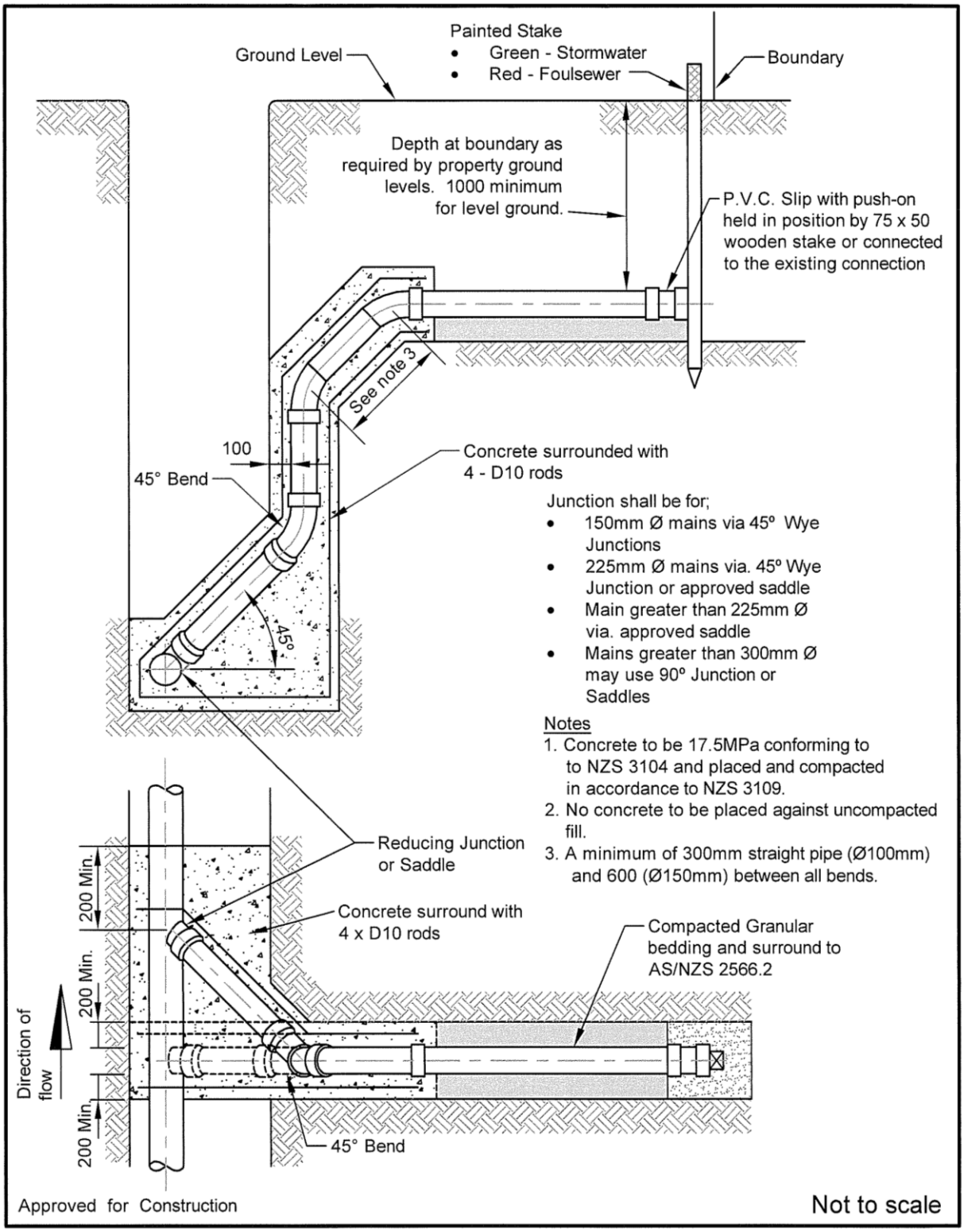

Invercargill CITY COUNCIL	**100 / 150 dia. u.P.V.C. Standard Connection showing Vertical Riser**	Fig. D4 Rev. 5 Date 9/08

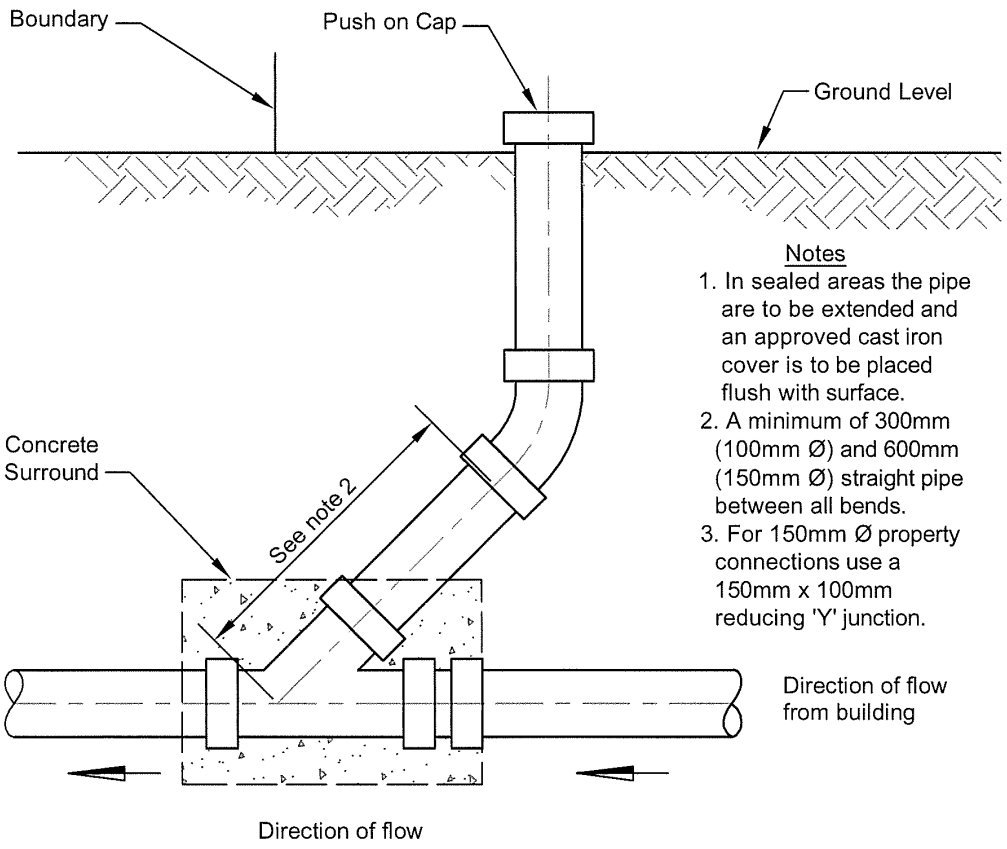

Notes

1. In sealed areas the pipe are to be extended and an approved cast iron cover is to be placed flush with surface.
2. A minimum of 300mm (100mm Ø) and 600mm (150mm Ø) straight pipe between all bends.
3. For 150mm Ø property connections use a 150mm x 100mm reducing 'Y' junction.

Foul Sewer and Stormwater System

Not to scale

Invercargill City Council	**Typical Details.** **Boundary Cleaning Eye**	Fig. D5 Rev. 6 Date 2/13

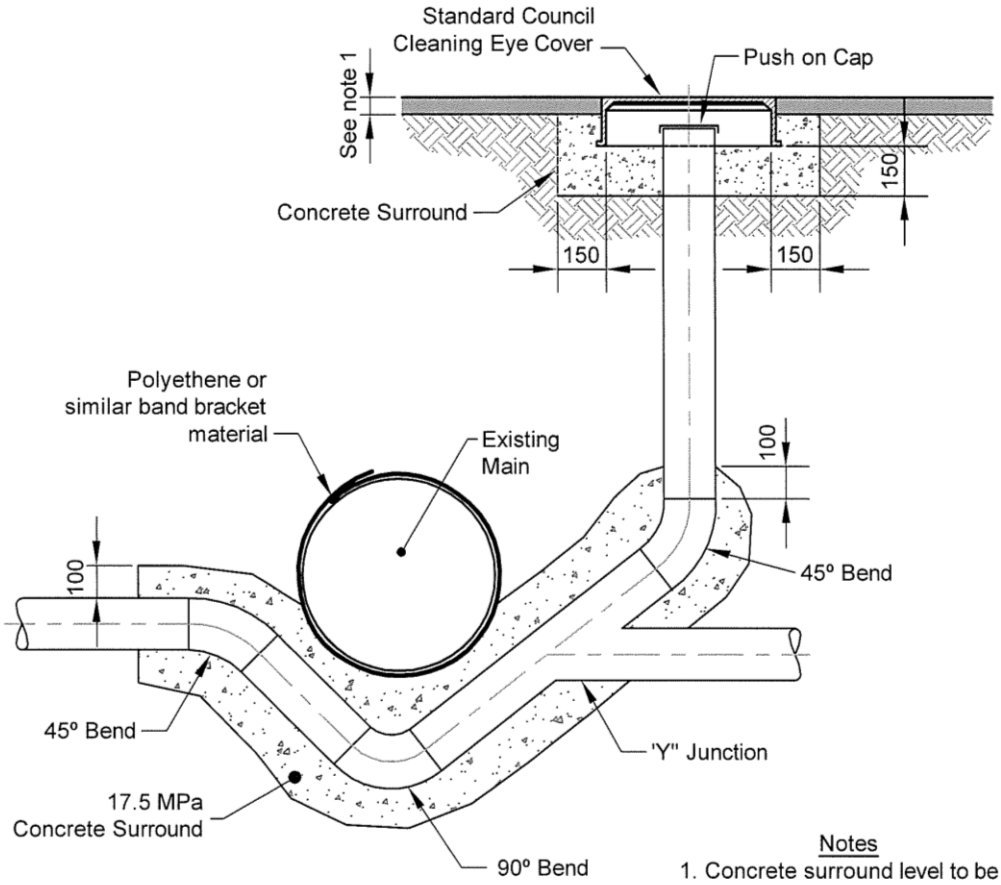

Notes

1. Concrete surround level to be
   Grass - Flush with lid
   Chipseal - Down 10mm
   Asphalt - Down 50mm road
   Down 25mm footpath
2. Requires drainage manager approval before installation

Not to scale

Invercargill CITY COUNCIL	**TYPICAL DETAIL** **RUNNING TRAP**	Fig. D6 Rev. 3 Date 9/08

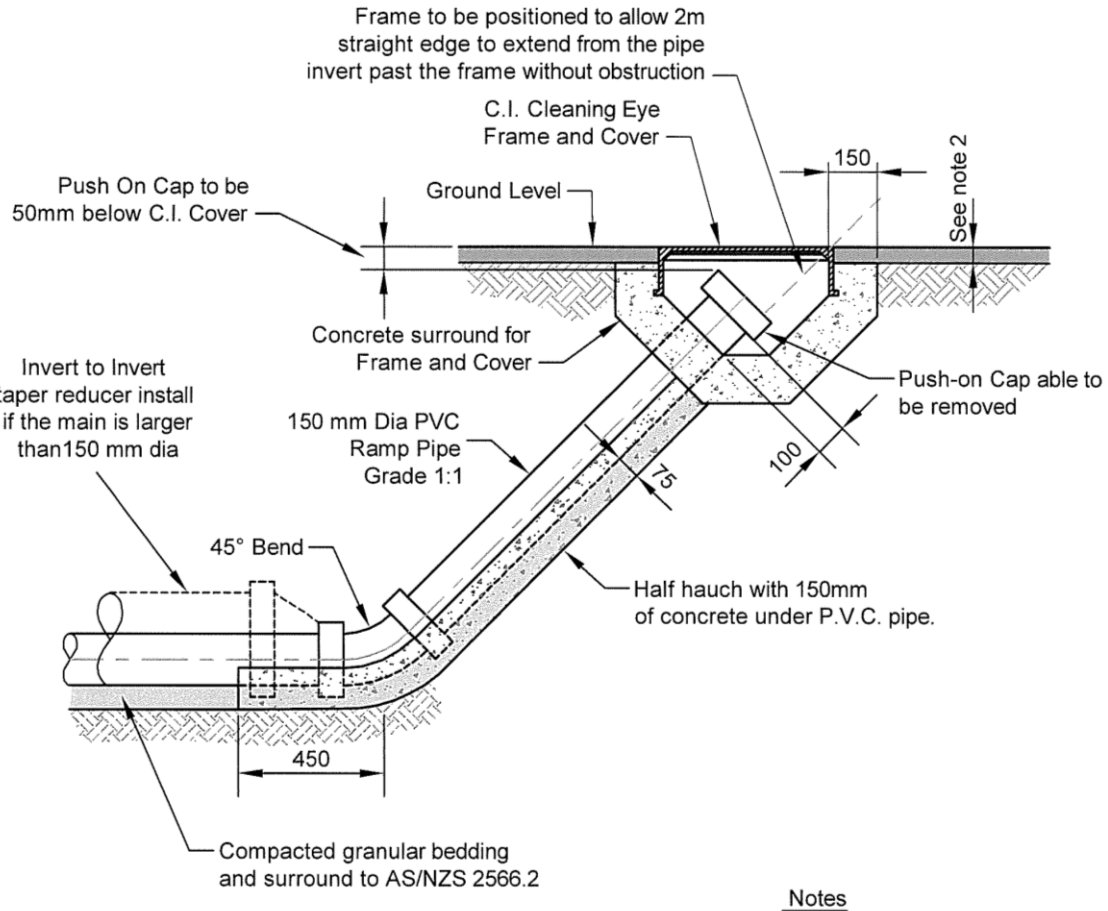

Notes

1. All concrete to be 17.5 MPa conforming with NZS 3104, placed and compacted in accordance to NZS 3109
2. Concrete surround level to be
   Grass - Flush with lid
   Chipseal - Down 10mm
   Asphalt - Down 50mm Road
   Down 25mm Footpath

Approved for Construction

Not to scale

Invercargill CITY COUNCIL	STANDARD CLEANING EYE	Fig. D7 Rev. 5 Date 9/08

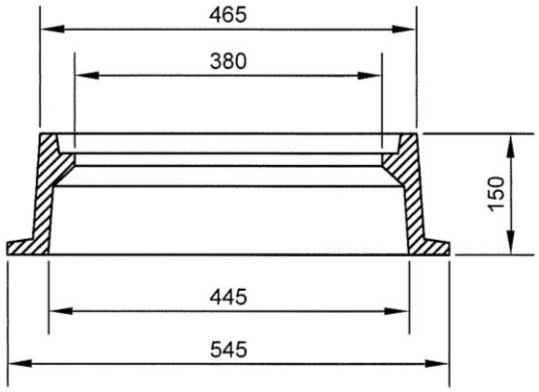

Half Section

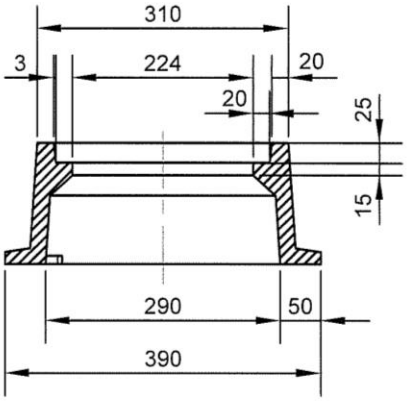

Half Section

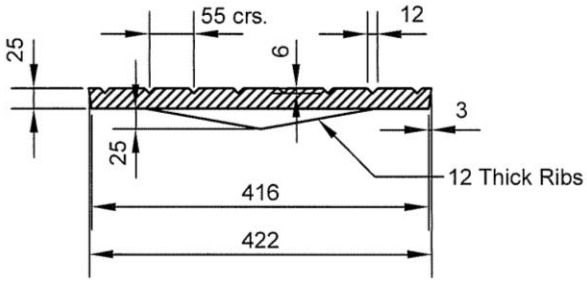

Half Section

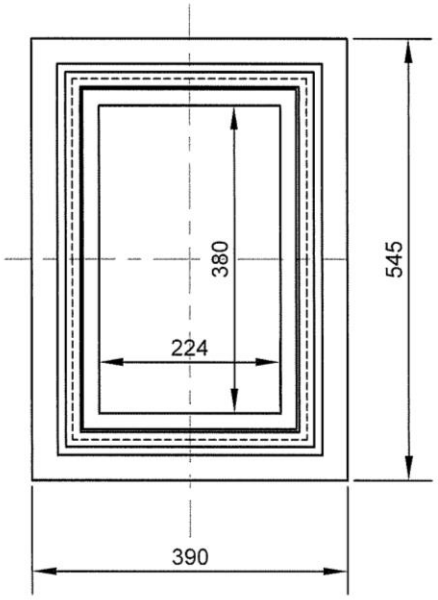

Plan of Frame

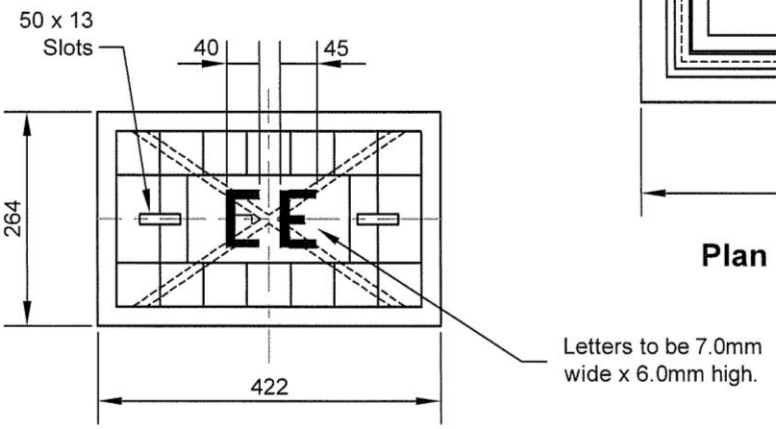

Plan of Cover

Approved for construction.

Not to scale

Invercargill CITY COUNCIL	**C.I. FRAME AND COVER FOR CLEANING EYE**	Fig. D9 Rev. 3 Date 3/08

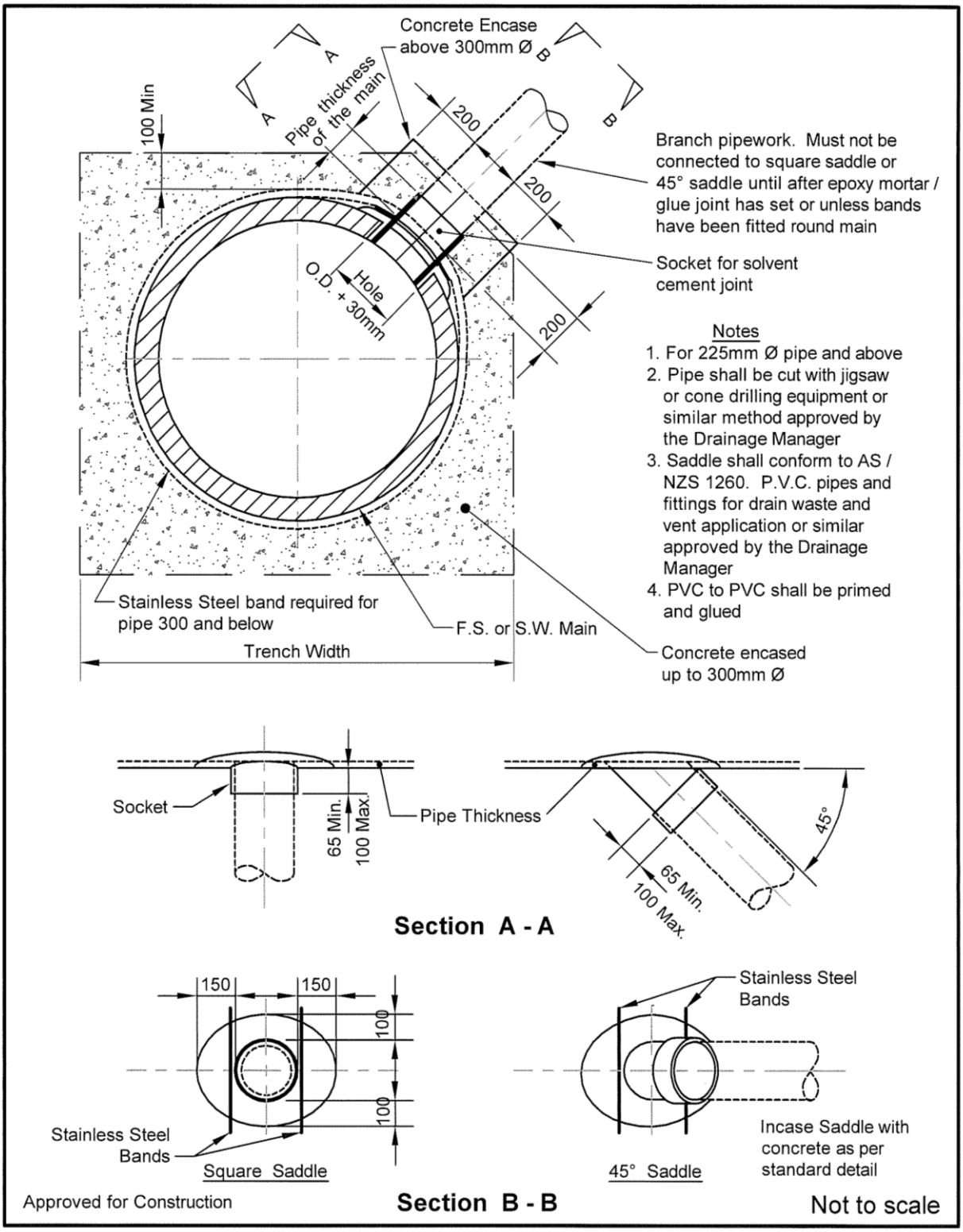

Invercargill CITY COUNCIL	DETAIL OF SADDLE CONNECTION	Fig. D10 Rev. 4 Date 9/08

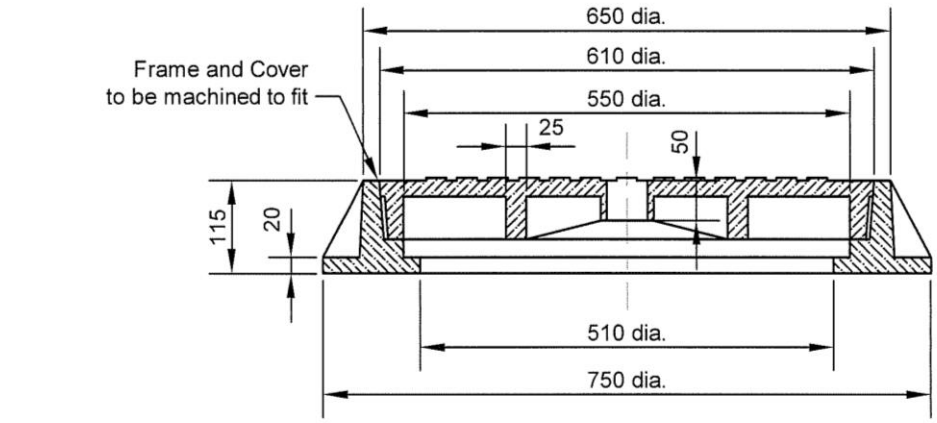

Section B - B

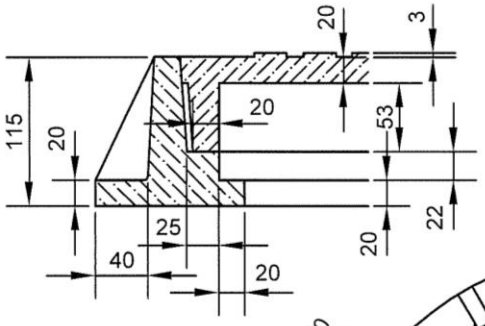

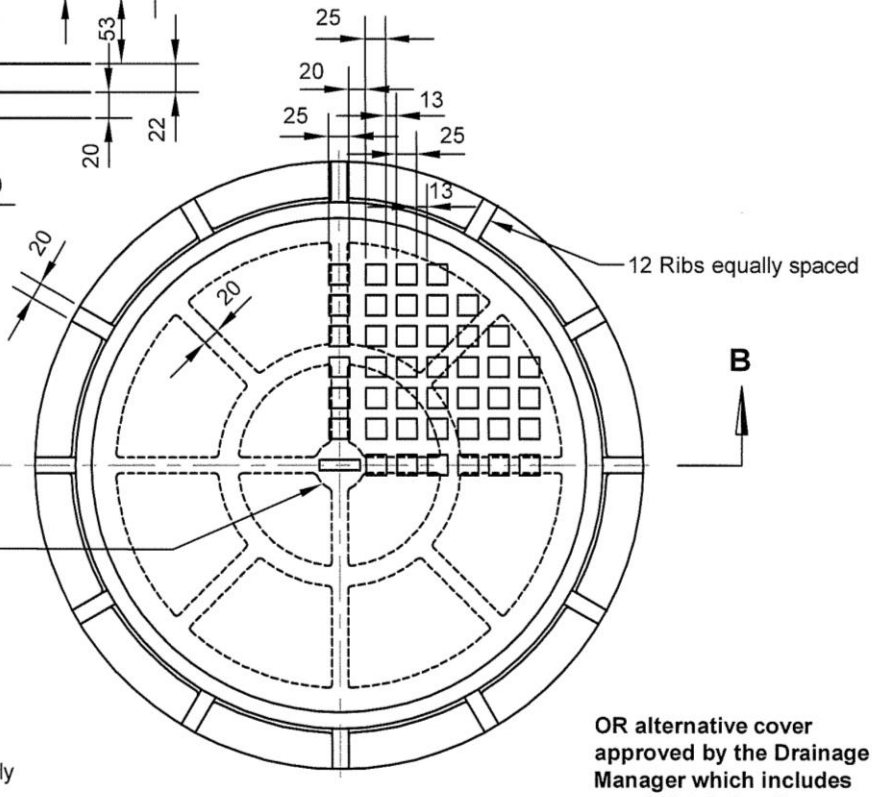

Manhole must be comply with TNZ HO Loading

OR alternative cover approved by the Drainage Manager which includes

- Saint-Goban Pam uPEX Korum Class D 400

Approved for Construction

Not to scale

Invercargill CITY COUNCIL	**C.I. FRAME AND COVER FOR HEAVY DUTY MANHOLE**	Fig. D11 Rev. 4 Date 9/08

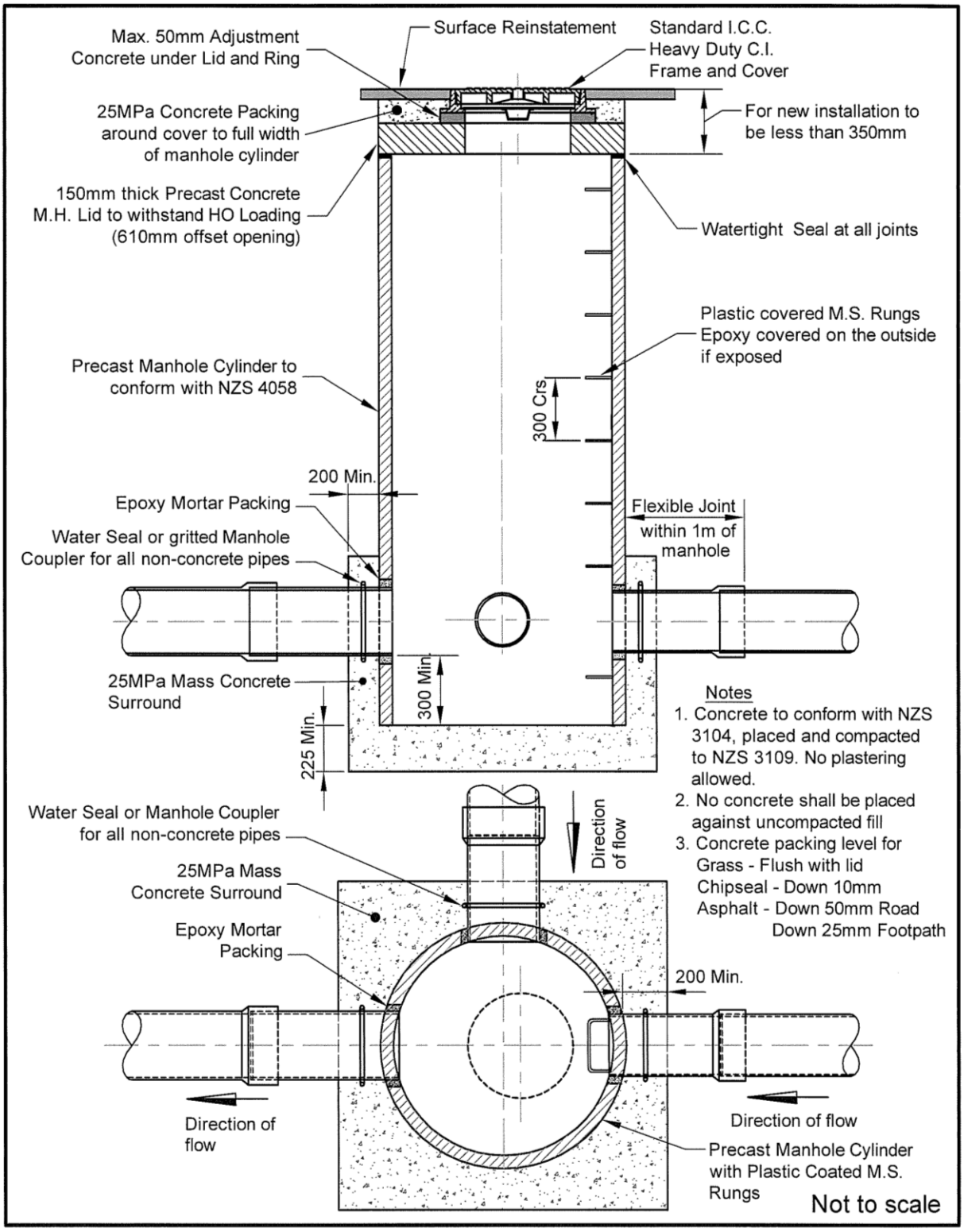

Invercargill CITY COUNCIL	STANDARD CONCRETE SUMP MANHOLE	Fig. D12 Rev. 3 Date 9/08

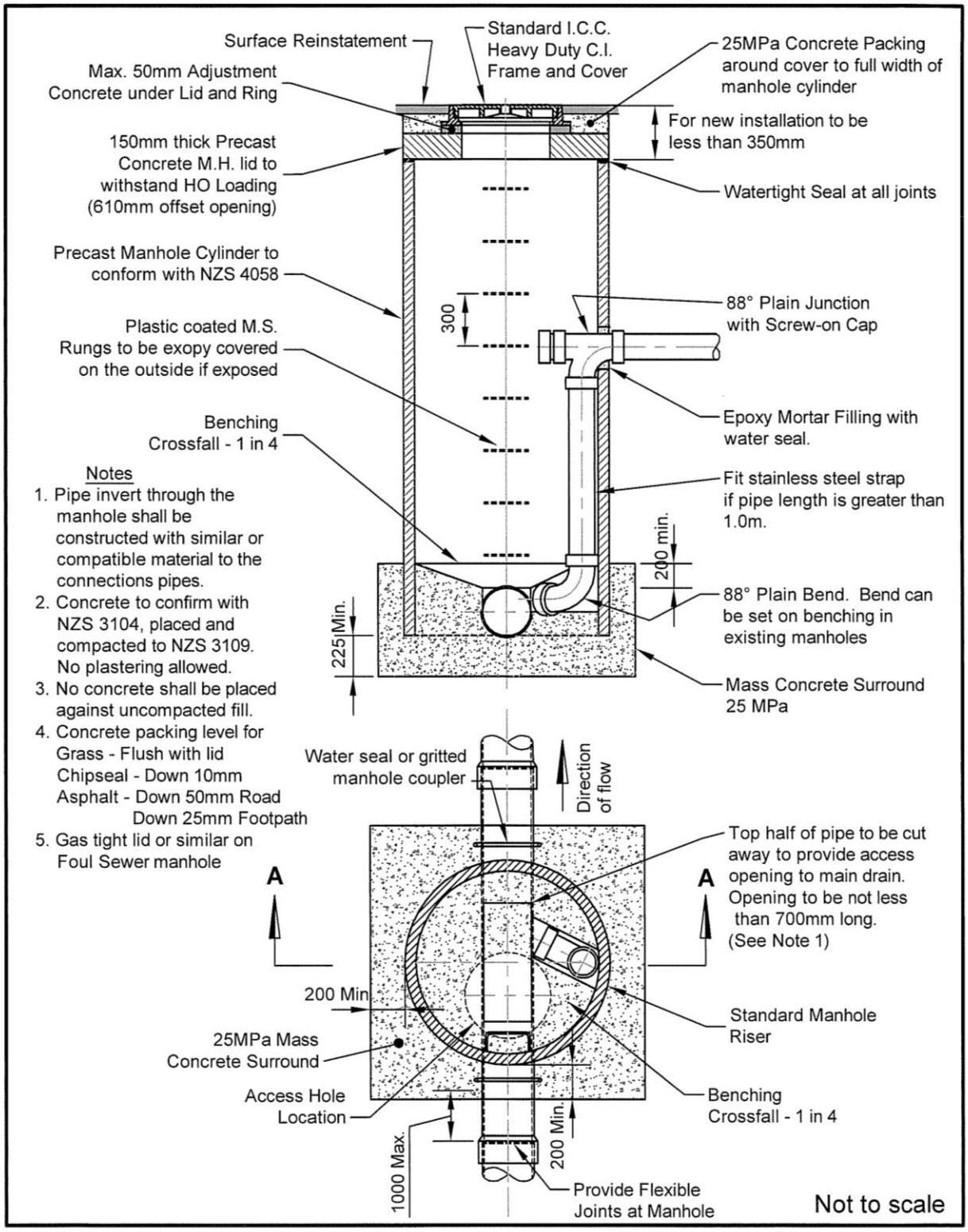

Invercargill CITY COUNCIL	**Standard Concrete Drop Manhole for 100 dia. and 150 dia. u.P.V.C. Pipe**	Fig. D13 Rev. 4 Date 9/08

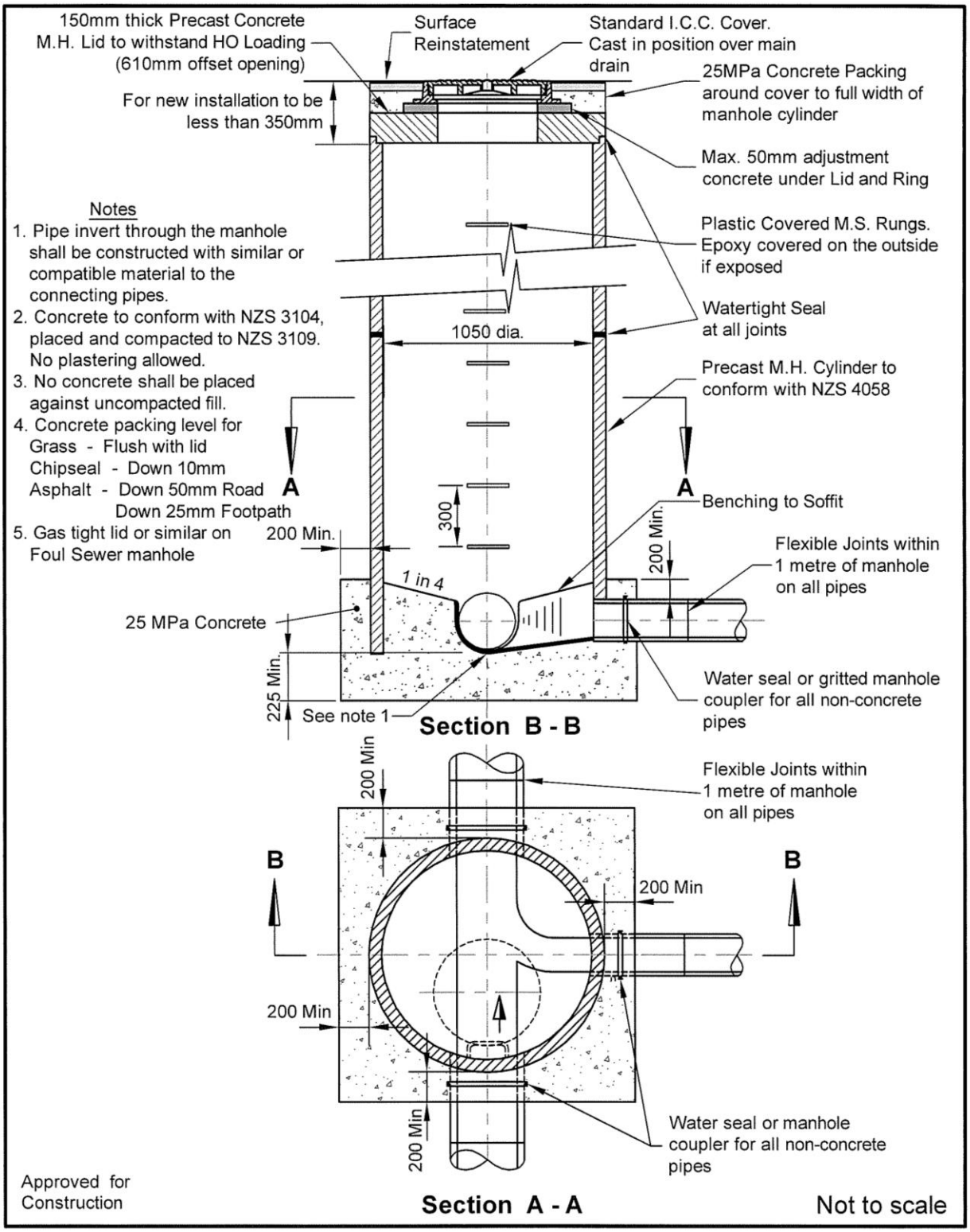

Invercargill CITY COUNCIL	STANDARD PRECAST CONCRETE MANHOLE	Fig. D14 Rev. 5 Date 9/08

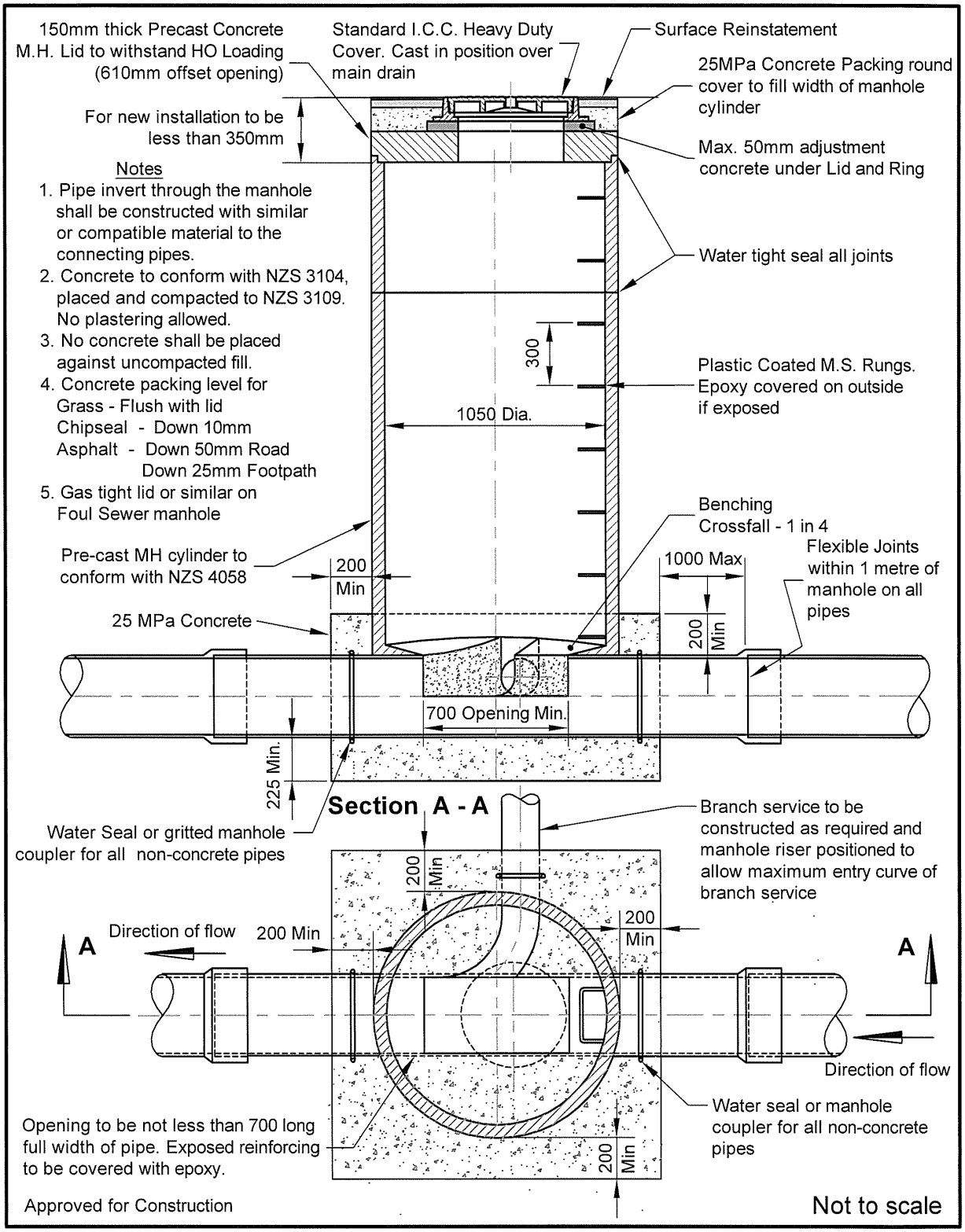

Invercargill CITY COUNCIL	STANDARD CONCRETE MANHOLE Ø150 TO Ø675 MAINS	Fig. D15 Rev. 4 Date 9/08

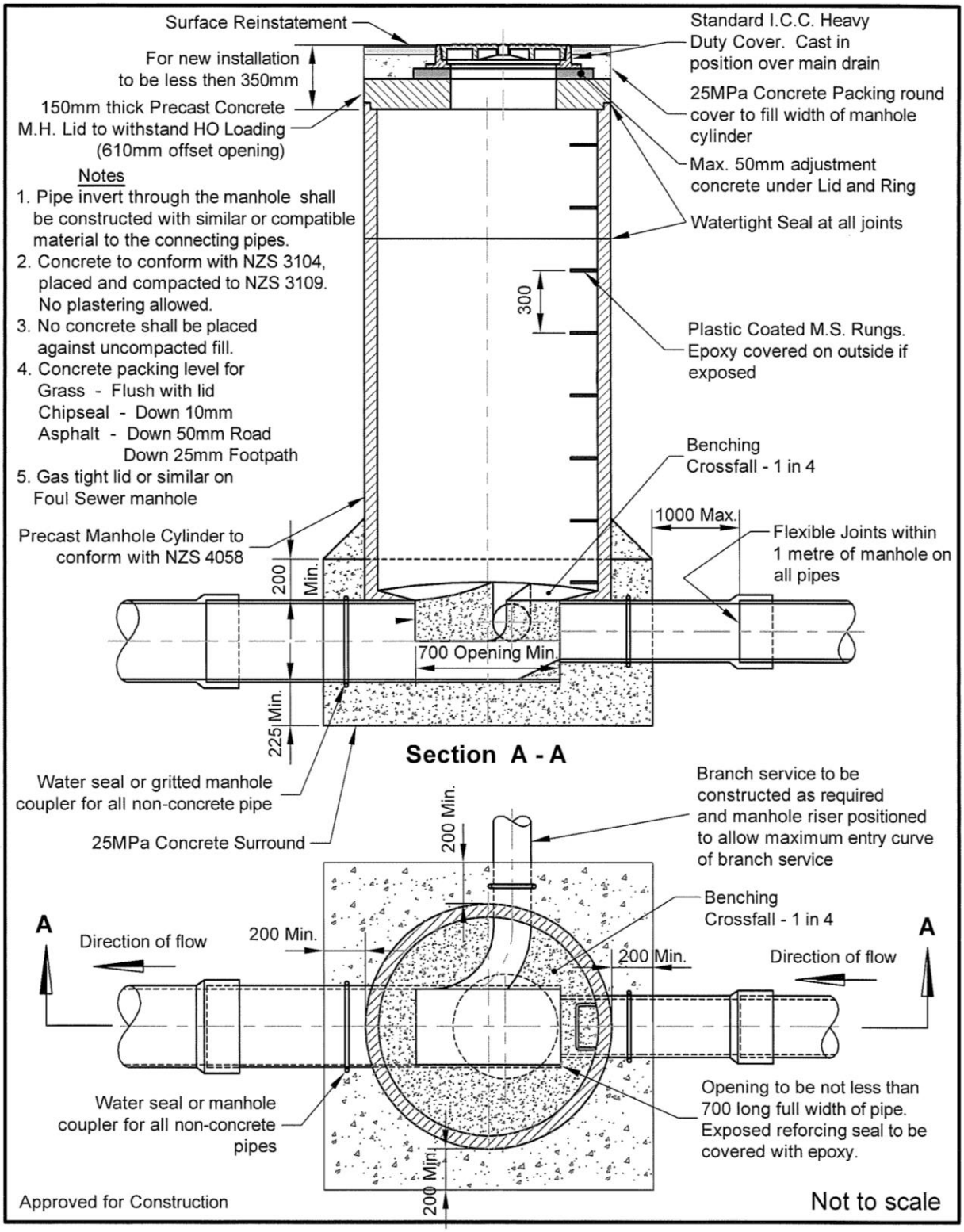

Invercargill CITY COUNCIL	**STANDARD CONCRETE MANHOLE WITH REDUCING DIAMETER MAIN Ø150 TO Ø600 MAINS**	Fig. D16 Rev. 4 Date 9/08

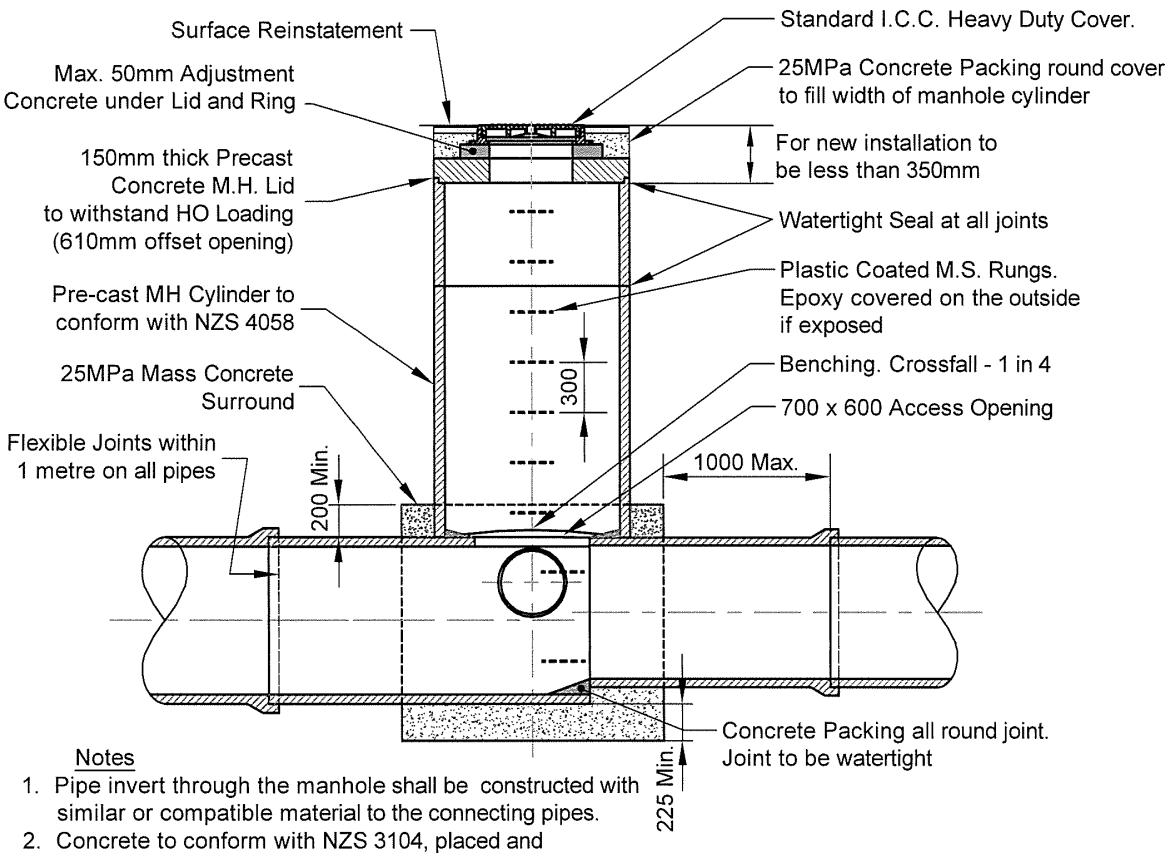

Notes

1. Pipe invert through the manhole shall be constructed with similar or compatible material to the connecting pipes.
2. Concrete to conform with NZS 3104, placed and compacted to NZS 3109. No plastering allowed.
3. No concrete shall be placed against uncompacted fill.
4. Concrete packing level for
   Grass - Flush with lid
   Chipseal - Down 10mm
   Asphalt - Down 50mm Road
   Down 25mm Footpath
5. Gas tight lid or similar on Foul Sewer manhole

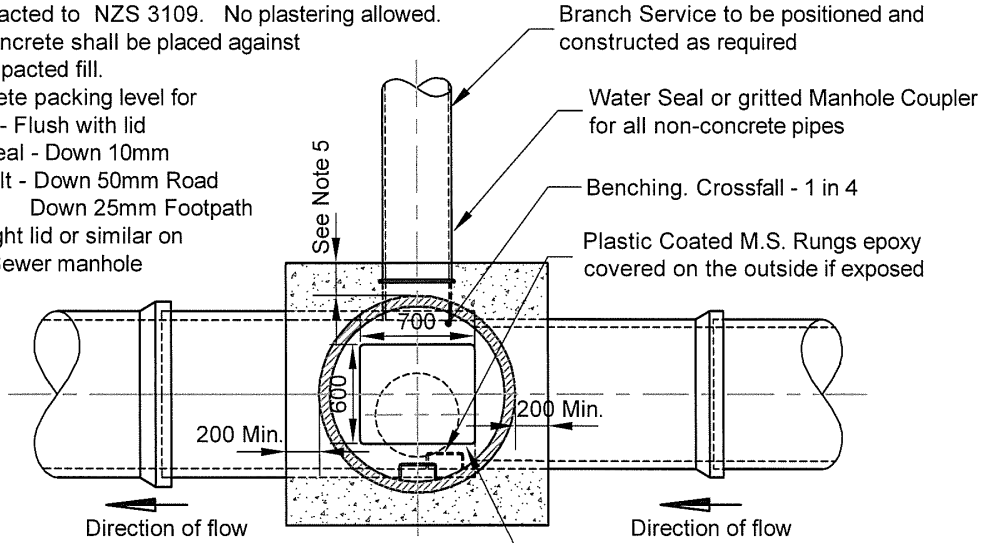

6. The mass concrete base shall be 200mm outside either the pipe (OD) or MH cylinder (OD) which ever is the greatest

Approved for Construction

Not to scale

Invercargill CITY COUNCIL	**STANDARD CONCRETE MANHOLE WITH REDUCING MAIN Ø750 TO Ø1800 RCRRJ MAINS**	Fig. D17 Rev. 4 Date 9/08

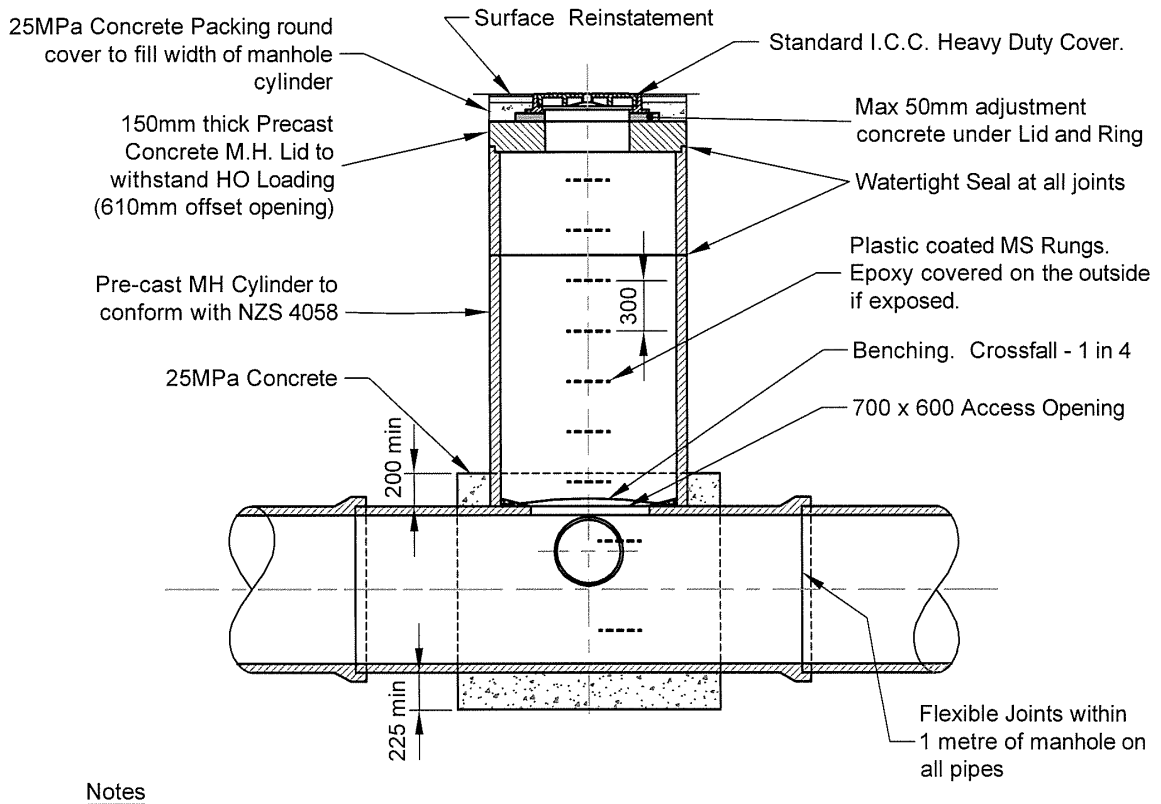

Notes

1. Pipe invert through the manhole shall be constructed with similar or compatible material to the connecting pipes.
2. Concrete to conform with NZS 3104, placed and compacted to NZS 3109. No plastering allowed.
3. No concrete shall be placed against uncompacted fill.
4. Concrete packing level for
   Grass - Flush with lid
   Chipseal - Down 10mm
   Asphalt - Down 50mm Road
   Down 25mm Chipseal
5. Gas tight lid or similar on Foul Sewer manhole

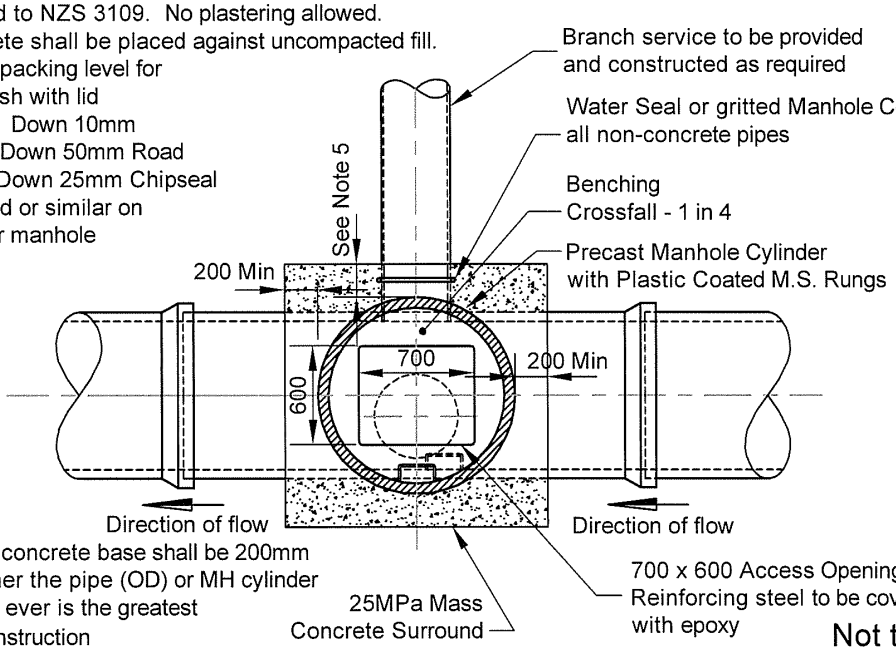

6. The mass concrete base shall be 200mm outside either the pipe (OD) or MH cylinder (OD) which ever is the greatest

Approved for Construction

Not to scale

Invercargill CITY COUNCIL	STANDARD CONCRETE MANHOLE Ø750 to Ø1800 RCRRJ MAINS	Fig. D18 Rev. 4 Date 9/08

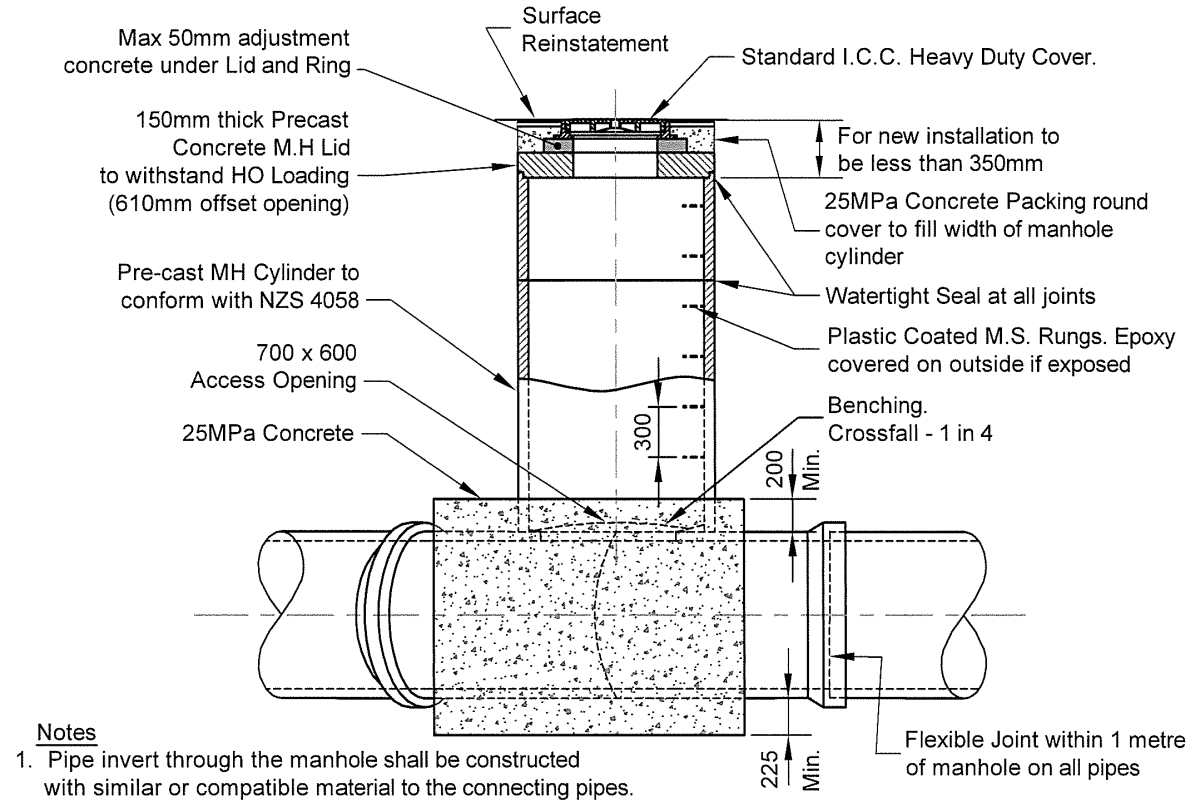

Notes

1. Pipe invert through the manhole shall be constructed with similar or compatible material to the connecting pipes.
2. Concrete to conform with NZS 3104, placed and compacted to NZS 3109. No plastering allowed.
3. No concrete shall be placed against uncompacted fill.
4. Concrete packing level for
   Grass - Flush with lid
   Chipseal - Down 10mm
   Asphalt - Down 50mm Road
   Down 25mm Footpath
5. Gas tight lid or similar on Foul Sewer manhole

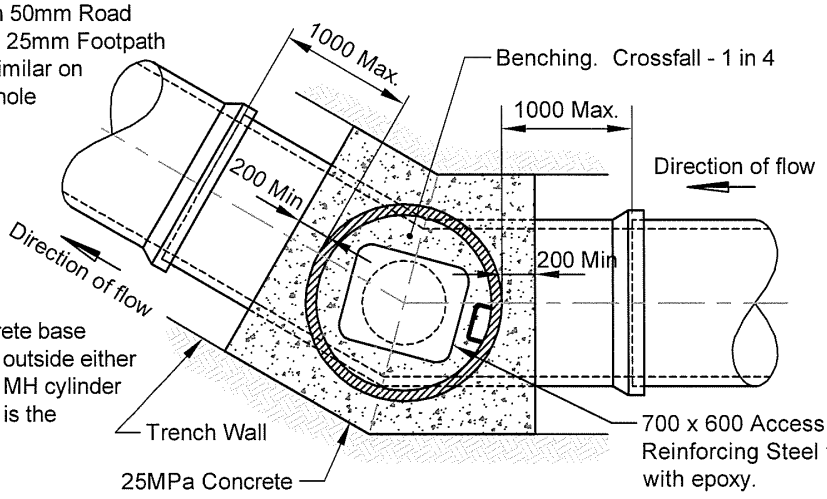

6. The mass concrete base shall be 200mm outside either the pipe (OD) or MH cylinder (OD) which ever is the greatest

Approved for Construction

Not to scale

Invercargill CITY COUNCIL	**STANDARD CONCRETE MANHOLE** **0° TO 59° BEND**	Fig. D20 Rev. 4 Date 9/08

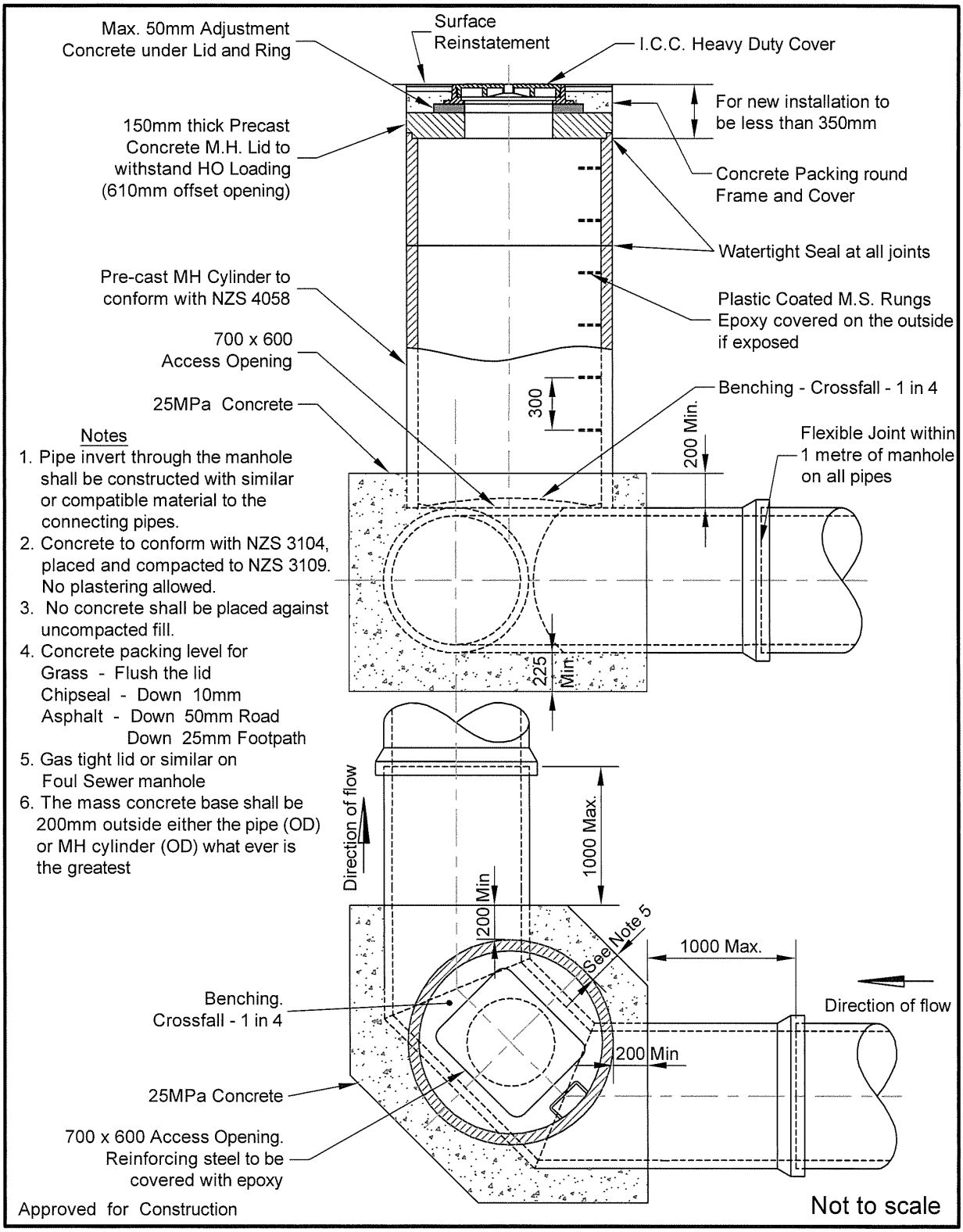

Invercargill CITY COUNCIL	**STANDARD CONCRETE MANHOLE** **60° TO 90° BEND**	Fig. D21 Rev. 4 Date 9/08

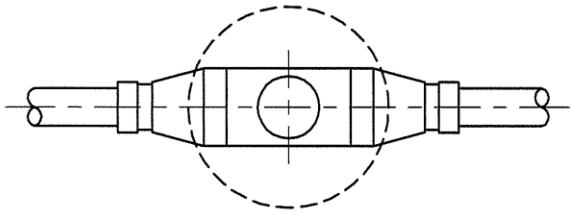

PLAN

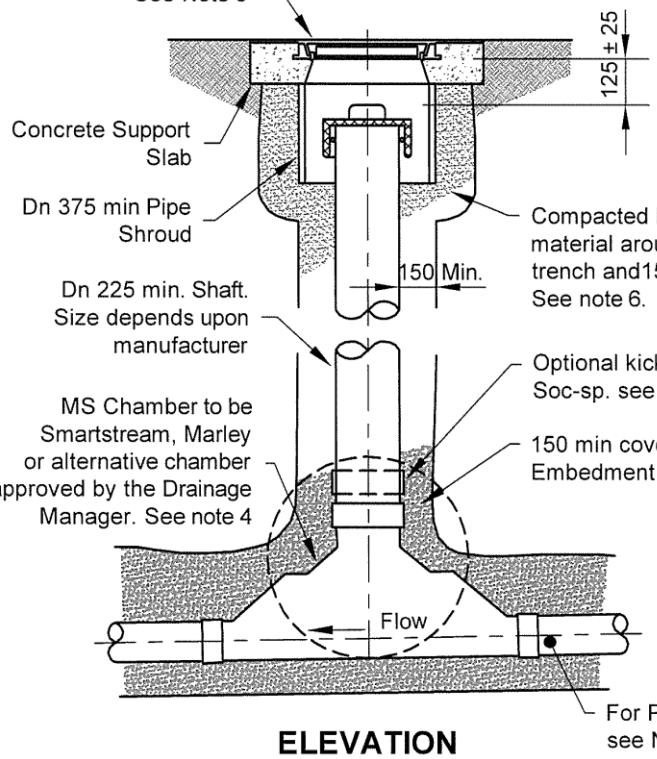

ELEVATION
MAINTENANCE SHAFT

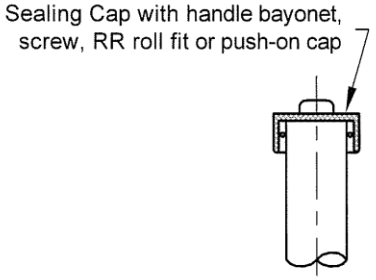

RISER SHAFT CAP

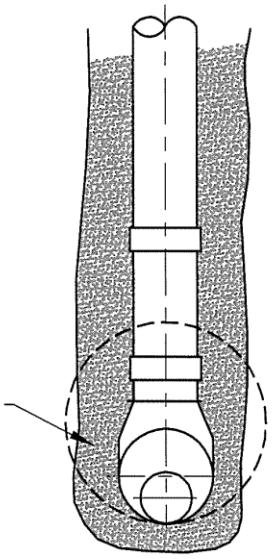

END ELEVATION
PLAIN RISER SHAFT

Note:
1. All Dimensions in millimetres.
2. MS may be manufactured using various materials and jointing systems as authorised by territorial authority.
3. Maximum dept to invert 3000.
4. Adjust MS to pipe grade by tiling MS Chamber, max deviation from vertical of the riser to be 1 : 10 or a maximum of 300 at surface use kicker bend if required to adjust riser to vertical.
5. Access Cover to be standard ICC Heavy Duty Manhole cover as per Fig. D11.
6. Compact backfill under access cover concrete support slabs and surrounds in accordance with design drawings.

Finished Levels of MS Covers	
Location	H
Undeveloped Areas	100
New Subdivisions	75
Roads, Accessways, Footpaths & Driveways	Flush
Existing Built-up Areas	25

Not to scale

Invercargill CITY COUNCIL	**MAINTENANCE SHAFTS FOR 150Dia. TO 225Dia. MAINS**	Fig. D22 Rev. 2 Date 6/12

Invercargill CITY COUNCIL

STANDARD EMBEDMENT & TRENCHFILL ARRANGEMENT

Fig. D23
Rev. 2
Date 6/12

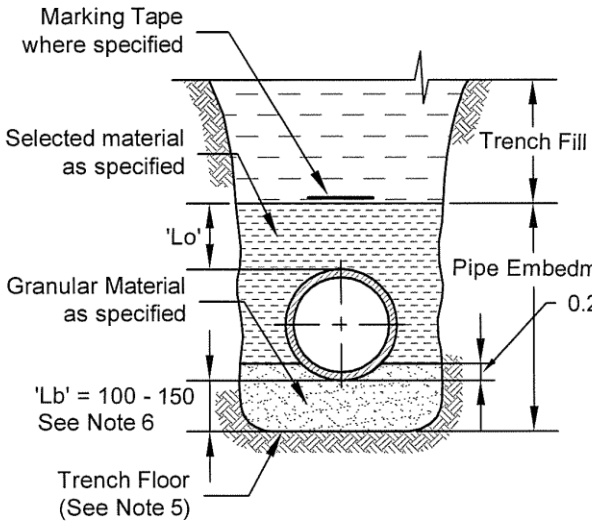

TYPE 2 SUPPORT

(See Note 9)

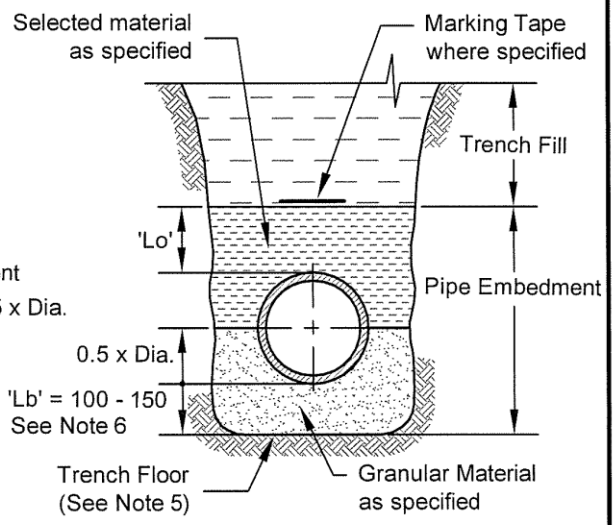

TYPE 2 SUPPORT

For rigid pipes only (See Note 3)
(See Note 9)

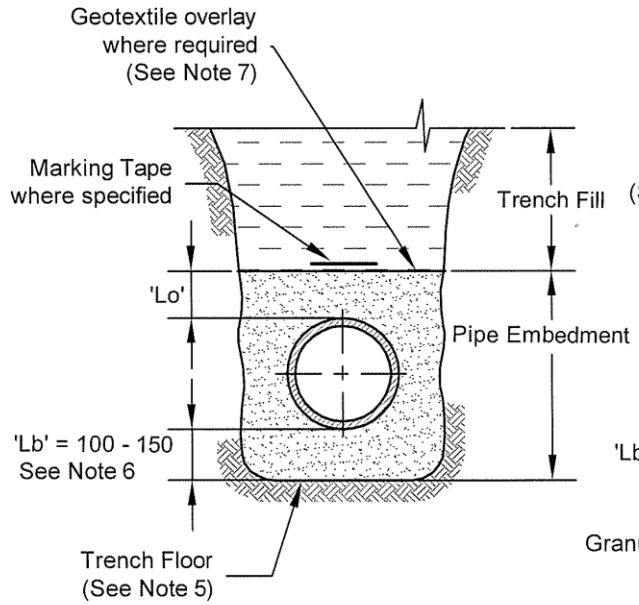

TYPE 3 SUPPORT

For Flexible and Rigid Pipes (See Note 3)

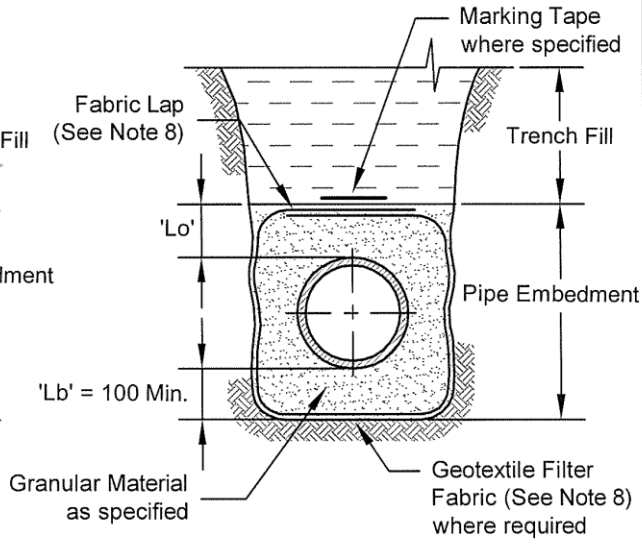

TYPE 4 SUPPORT

With Geotextile for flexible and
Rigid Pipes (See Note 3)

EMBEDMENT TYPES TO BE SPECIFIED IN DESIGN DRAWINGS

Must be read in conjunction with D24A

Not to scale

Invercargill CITY COUNCIL	STANDARD EMBEDMENT FOR FLEXIBLE AND RIGID PIPES	Fig. D24 Rev. 1 Date 2/12

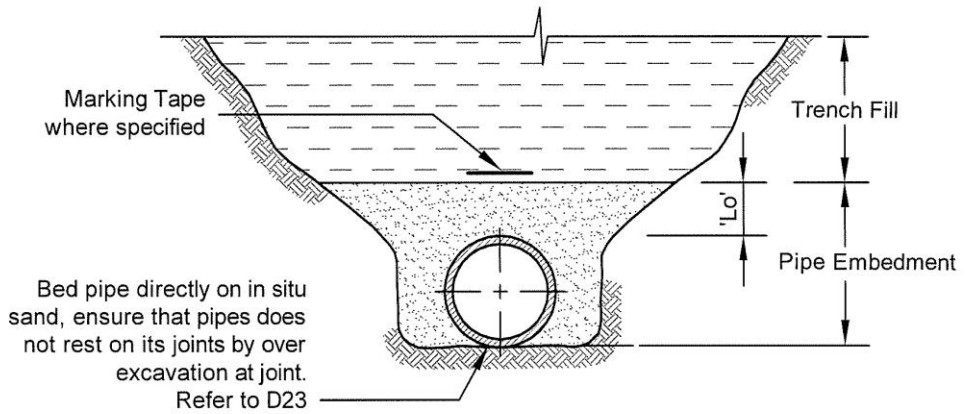

TRENCH IN SAND STRATA

Note:

1. All dimensions in millimetres.
2. This drawing to be read in conjunction with D23
3. Pipe classification:
   (a) Rigid pipes: VC, RC, Steel, and DI
   (b) Flexible pipes: PVC, GRP and PE.
4. Placement of embedment, trenchfill, & compaction to meet the requirements of drawings and specifications.
5. Excavate or compact trench floor to provide a flat firm base to support bedding material and minimise pipeline settlement. When excavated, replace with granular material as specified for bedding or adopt type 1, 2, 3 or 4 support as required.
6. Ensure bedding is deep enough that pipe joint projections (Sockets, Flanges) do not touch trench floor - See Fig. D23
7. Type 4 support to be used where migratory native soils (Sands and clays) are encountered adjacent to the embedment zone and single size aggregate is used.
8. Geotextile overlay is required for coarse aggragate embedment ≥ 5 mm.
   Lay Geotextile Filter Fabric against trench floor and walls such that it fully encases the embedment.
   - Press filter fabric into the voids before installing embedment to prevent fabric tearing.
   - Provide a minimum of 300 overlap at all filter fabric joints.
9. In some areas local practice may allow use of selected excavated material as pipe embedment.
10. In unsuitable ground conditions specific design is required. See WSA 03 and WSA 04 drawings for guidance.
11. Concrete pipes should be based on Figures 11 - 13 in AS/NZS 3725.

Not to scale

Invercargill CITY COUNCIL	**STANDARD EMBEDMENT FOR FLEXIBLE AND RIGID PIPES**	Fig. D24A Rev. 2 Date 6/12

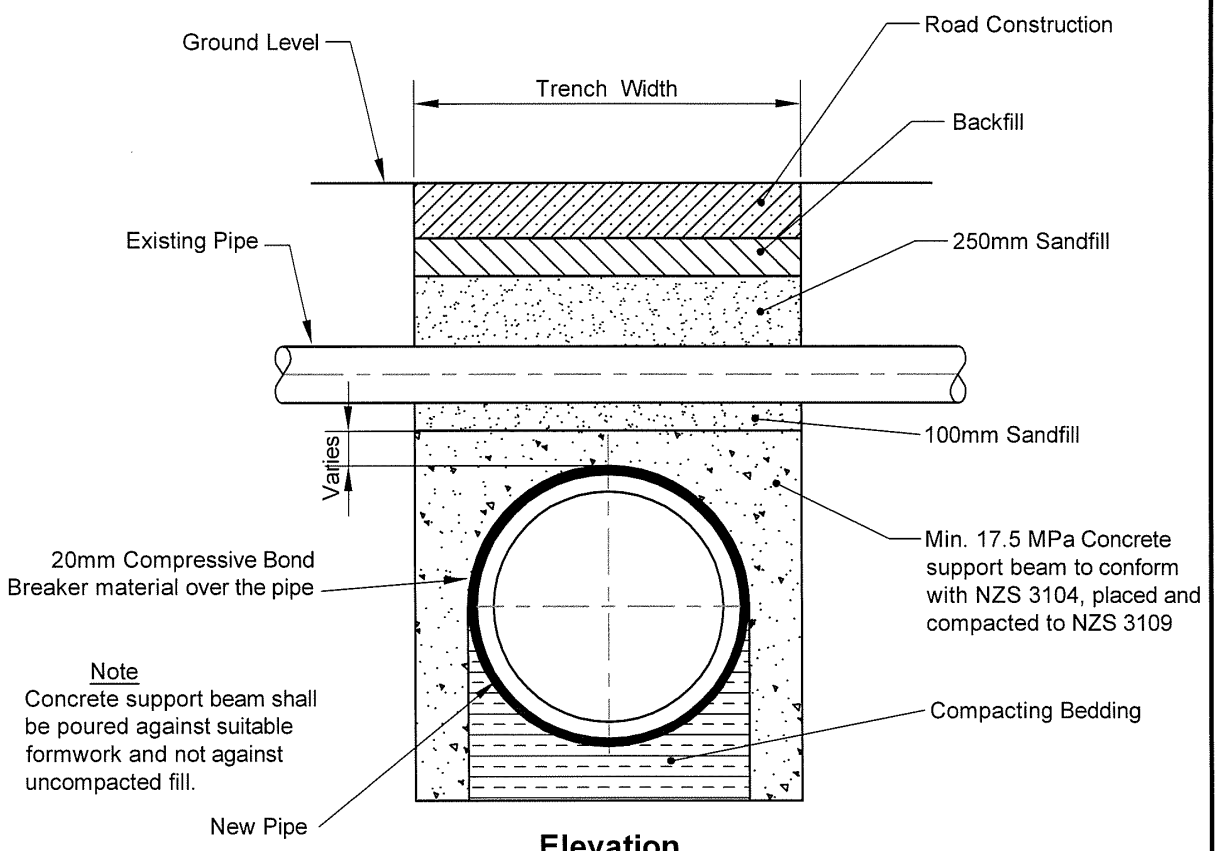

Elevation

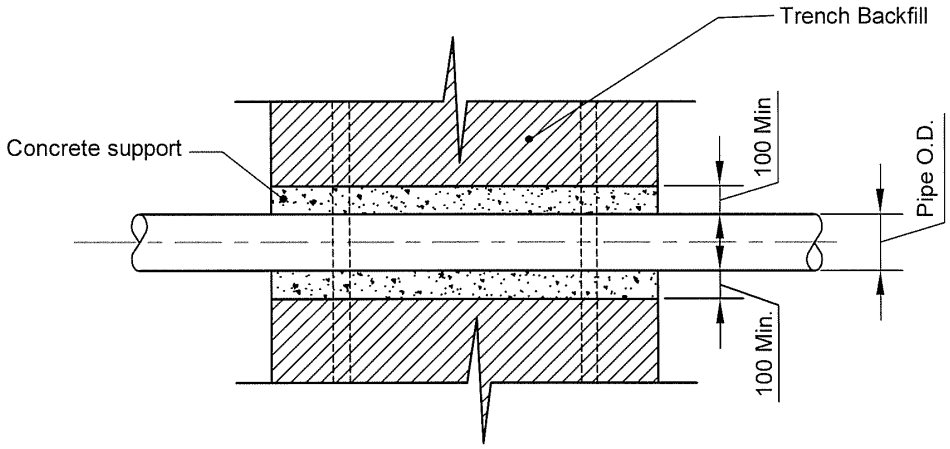

Plan

Approved for construction

Not to scale

Invercargill CITY COUNCIL	STANDARD DETAIL OF SERVICE SUPPORT	Fig. D26 Rev. 4 Date 9/08

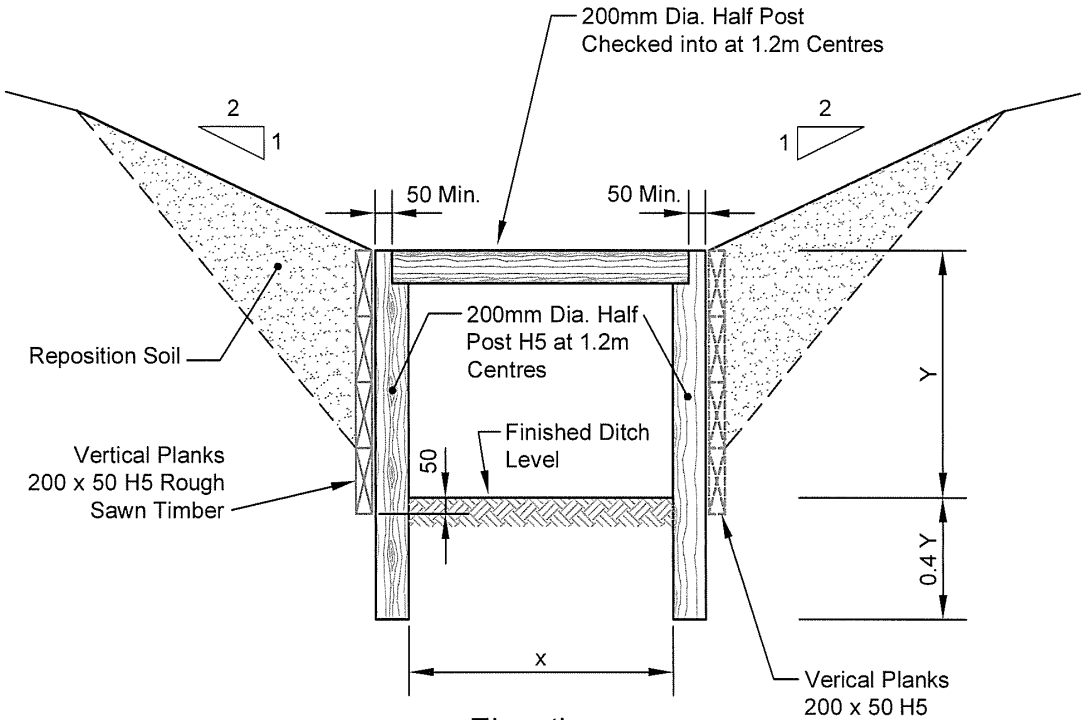

Elevation

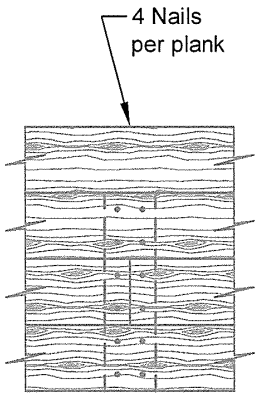

Joint Detail

Notes

1. Vertical Planks Joints to be position over posts where possible. Jointing detail to be used elsewhere.
2. Nails to be 100 x 4 Galvanised Flat Heads.
3. Backing Board to span at least two solid Vertical Planks.

Not to scale

Invercargill CITY COUNCIL	STANDARD DETAILS FOR TIMBERING OPEN DITCHES	Fig. D28 Rev. 2 Date 3/08

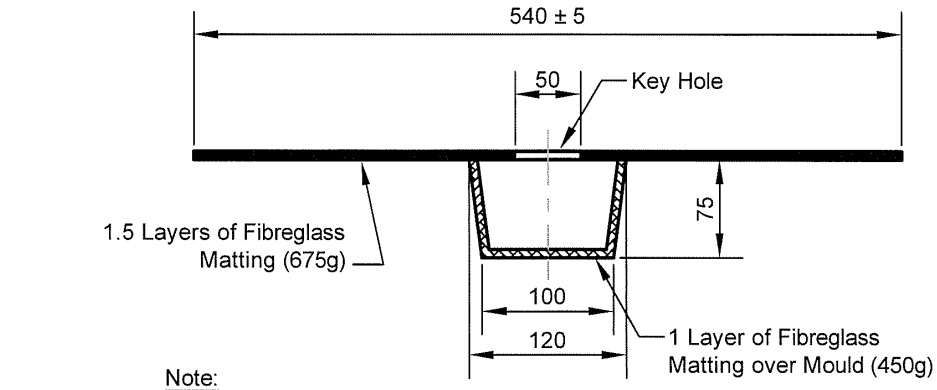

Note:
1. A half layer of fibreglass is a 220g/m² fibre mat.
2. Mould to be round 500g Margarine Container or approved similar

Section A - A

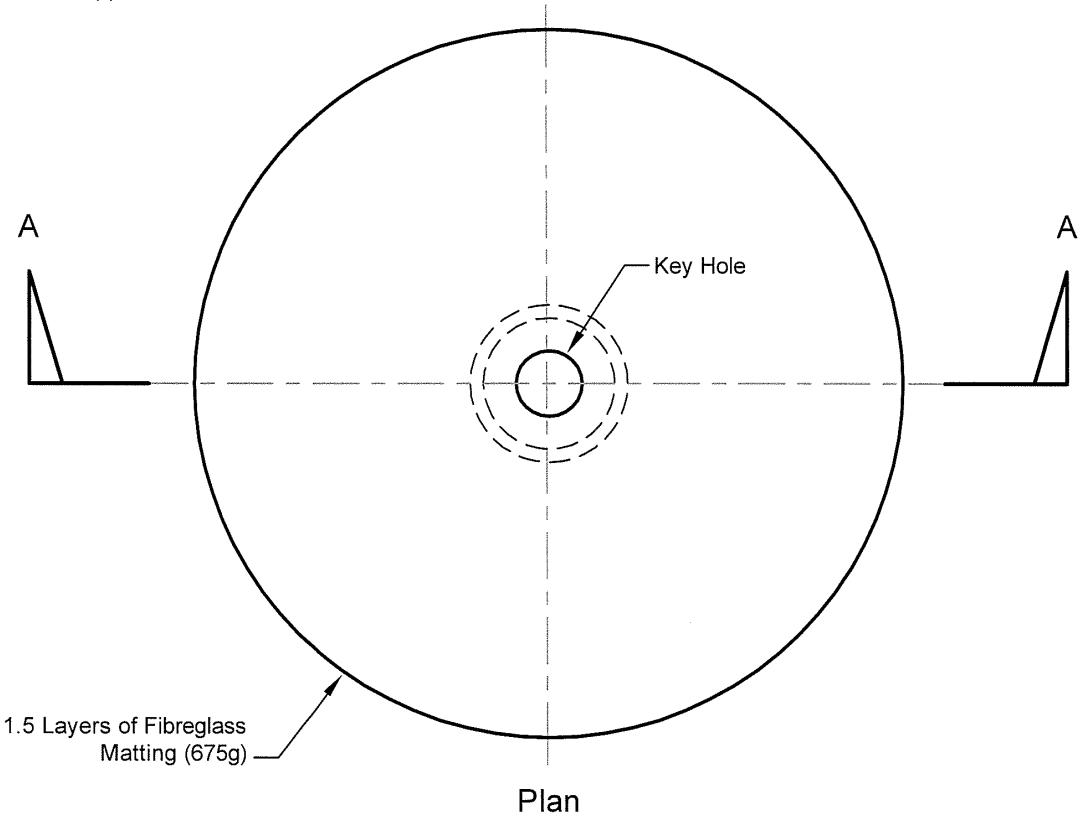

Plan

Approved for Construction

Not to scale

Invercargill CITY COUNCIL	**FOULSEWER MANHOLE GAS TRAY**	Fig. D29 Rev. 2 Date 10/06

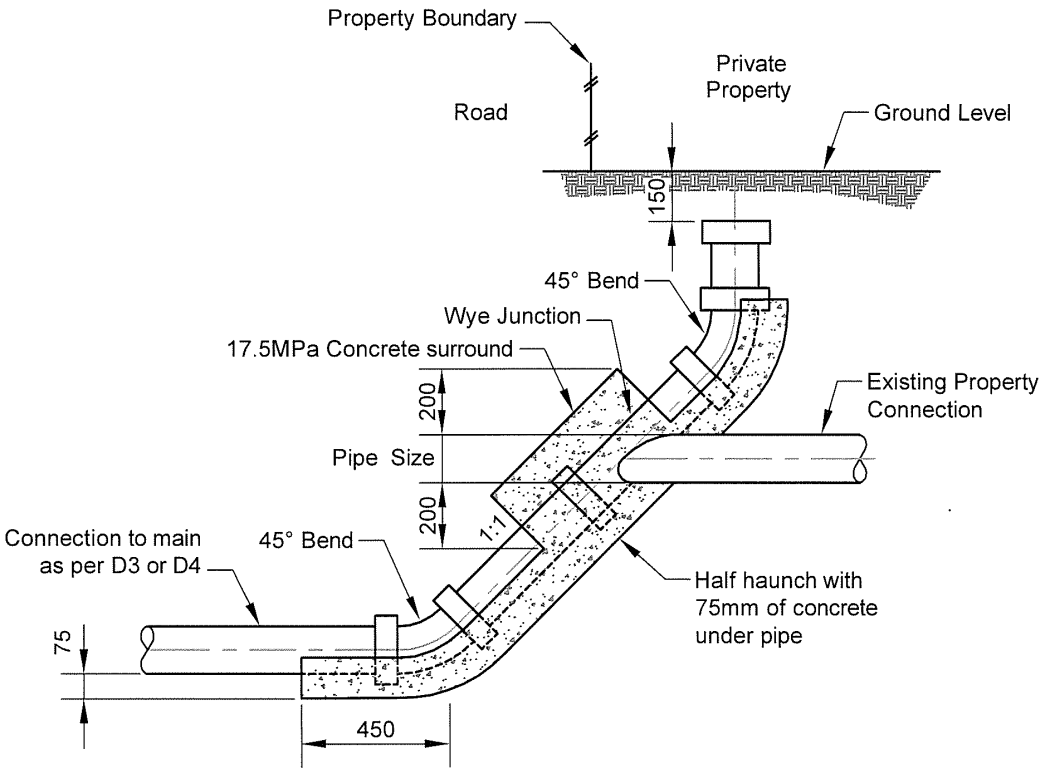

Approved for Construction

Not to scale

Invercargill CITY COUNCIL	**CONVERSION OF CHANNEL CONNECTION TO DEEP CONNECTION**	Fig. D30 Rev. 2 Date 9/08

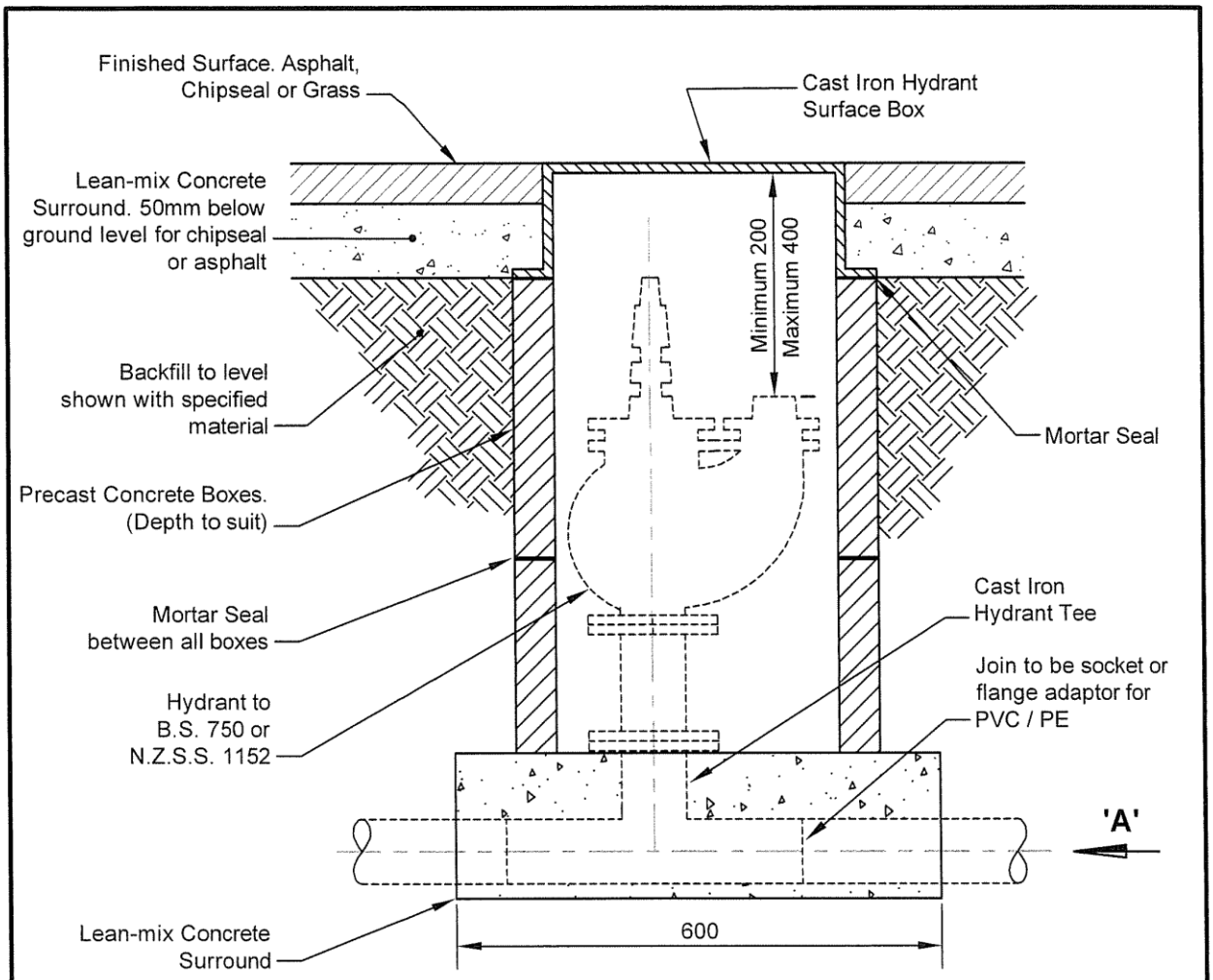

Notes

1. Unsealed surfaces. Backfill to surface with specified material and ram hard.
2. Lean-mix concrete to be 10 parts aggregate to 1 part cement to be placed fairly dry and rammed hard.

Invercargill CITY COUNCIL	HYDRANT INSTALLATION	Fig. W1 Rev. 3 Date 2/12

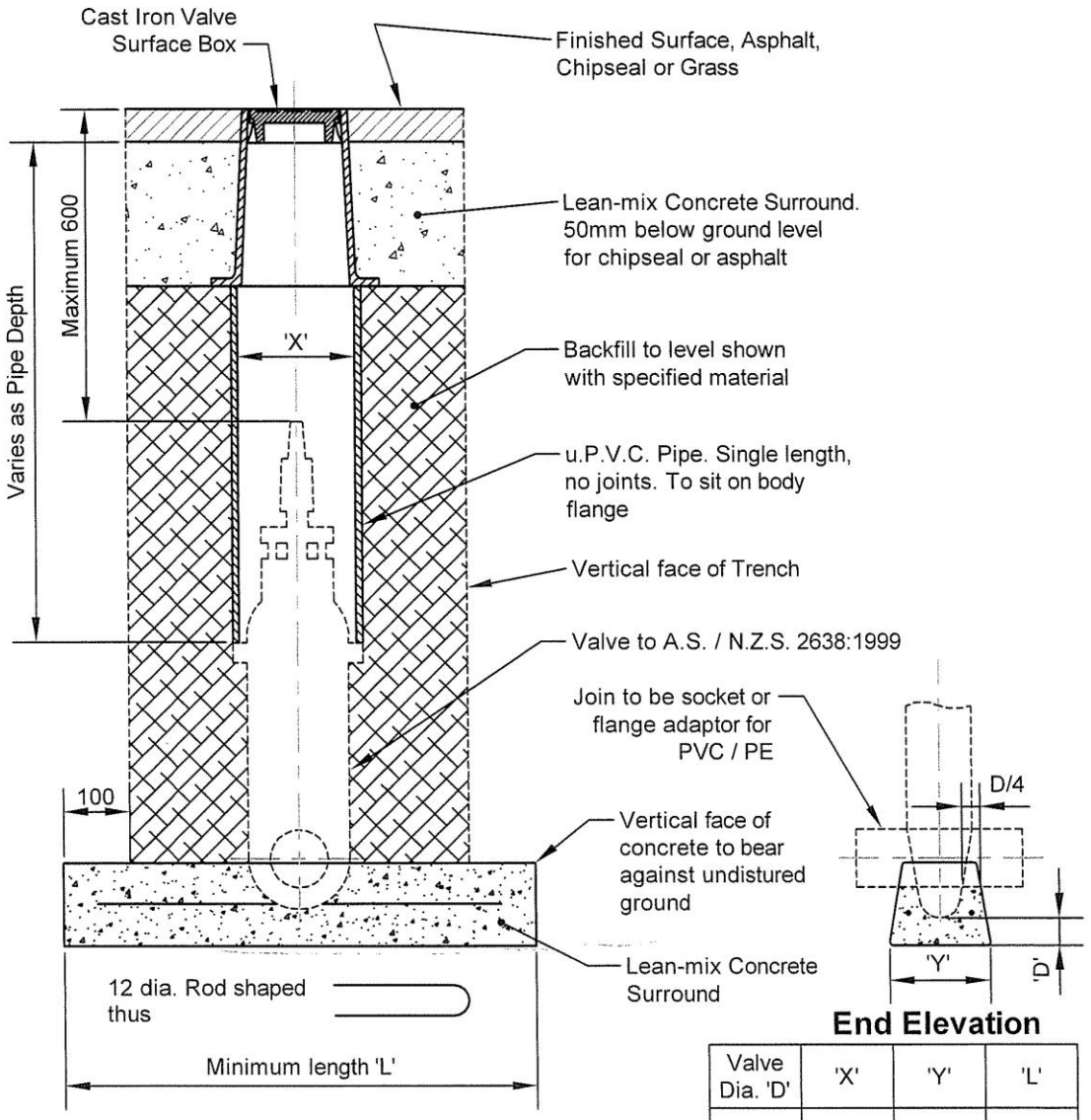

Section through Main

End Elevation

Valve Dia. 'D'	'X'	'Y'	'L'
100	250	200	600
150	315	250	600
200	250	300	750
250	315	400	750

Notes
1. Unsealed surfaces. Backfill to surface with specified material and ram hard.
2. Lean-mix concrete to be 10 parts aggregate to 1 part cement to be placed fairly dry and rammed hard.

Not to scale

Invercargill CITY COUNCIL	VALVE INSTALLATION	Fig. W3 Rev. 8 Date 2/12

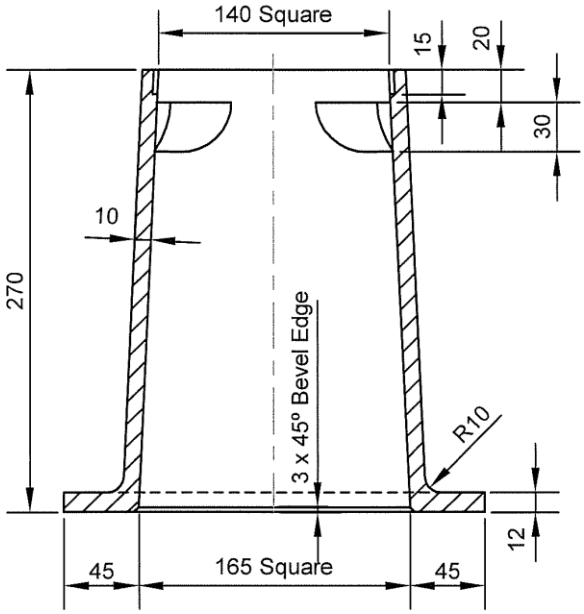

Half Section

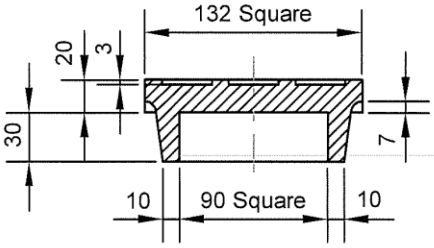

Half Section

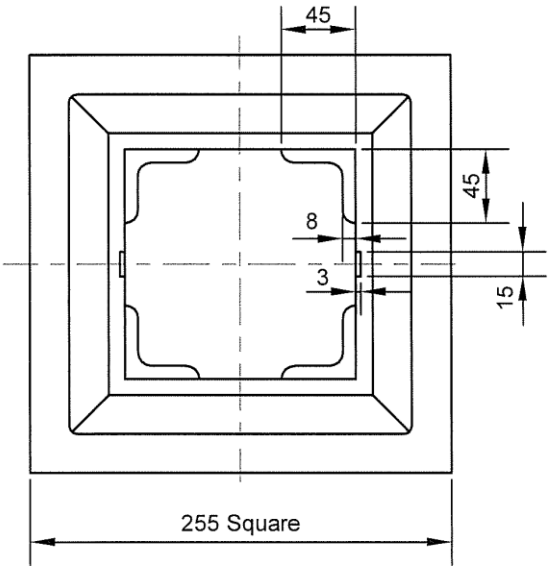

Plan

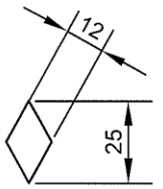

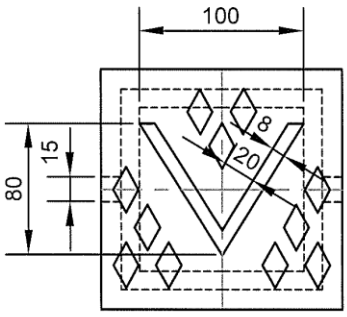

Plan

Not to scale

Invercargill CITY COUNCIL	**VALVE SURFACE BOX**	Fig. W5 Rev. 1 Date 8/03

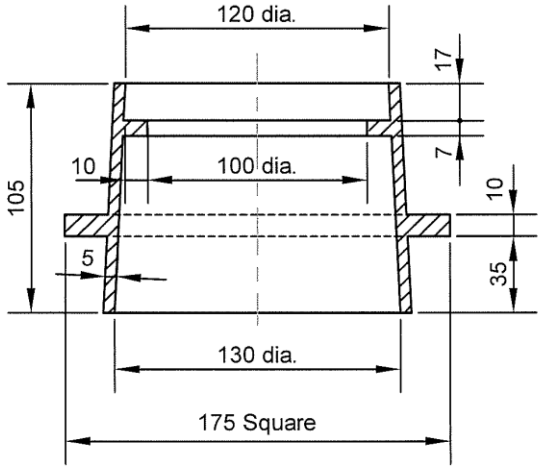

Half Section

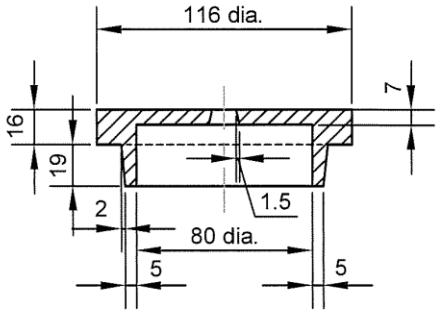

Half Section

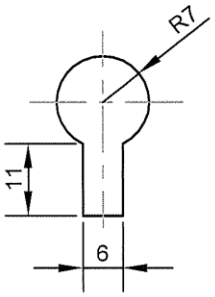

Plan of Keyhole

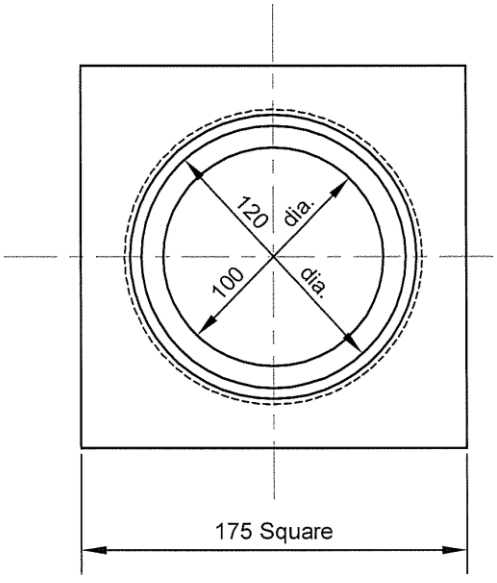

Plan

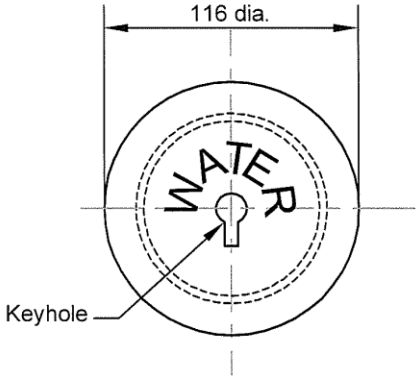

Plan

Note
Letters to be 1.5 wide x
1.0 high x 20 long

Not to scale

Invercargill CITY COUNCIL	**TOBY BOX**	Fig. W6 Rev. 2 Date 8/03

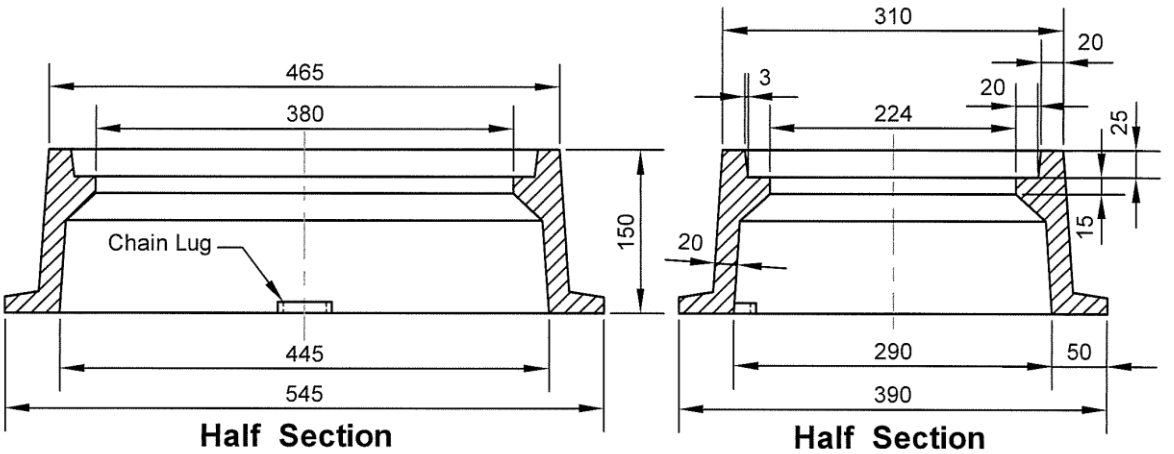

Half Section

Half Section

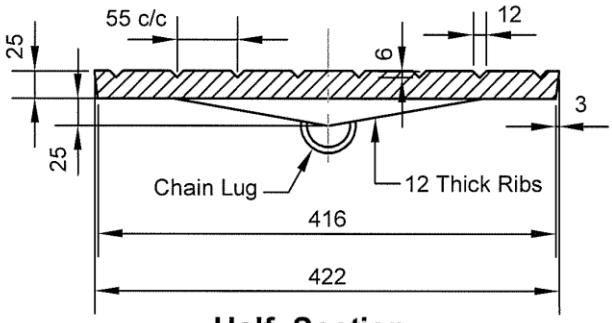

Half Section

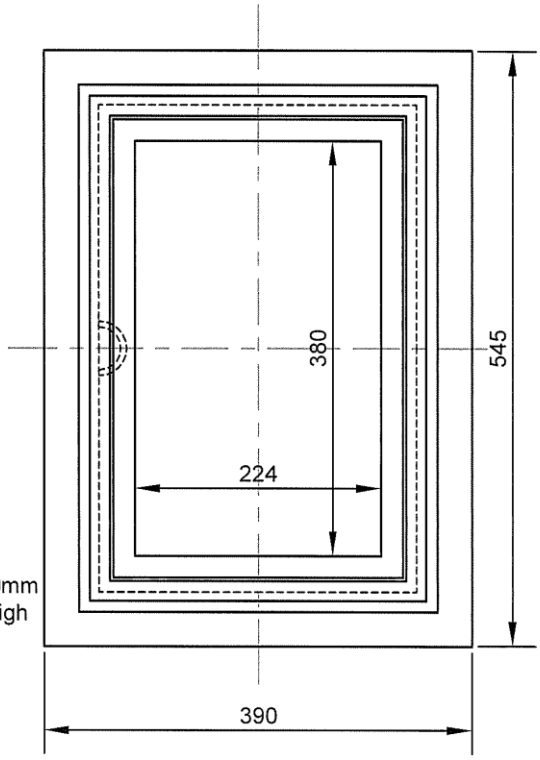

Plan of Frame

Air Valve Cover same casting with letters A.V. in place of F.H.

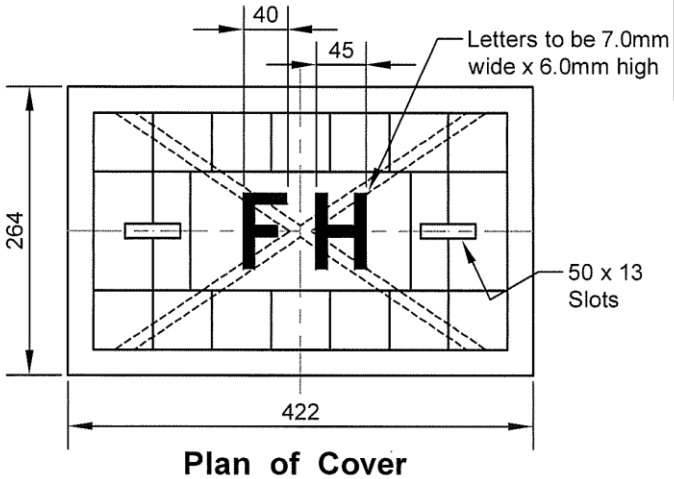

Plan of Cover

Note
Chain Lugs to be joined with length of chain to allow cover to be lifted clear of opening.

Not to scale

Invercargill CITY COUNCIL	**SURFACE BOX** **SCREWDOWN HYDRANT**	Fig. W7 Rev. 1 Date 8/03

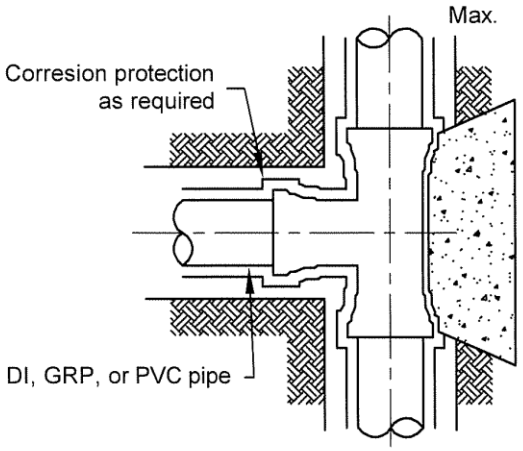

PLAN

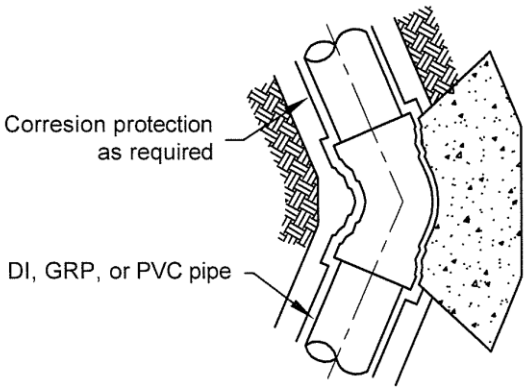

PLAN

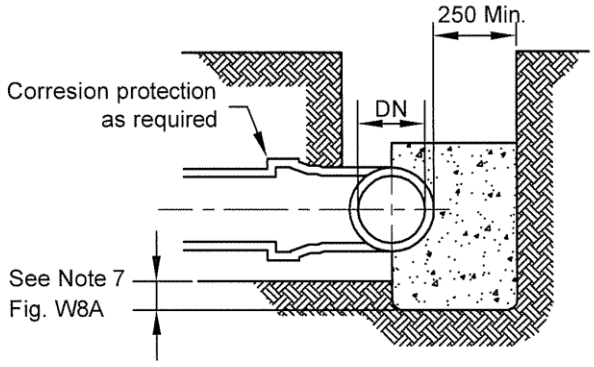

ELEVATION (FOR HORIZONTAL THRUST)

THRUST BLOCK FOR TEES

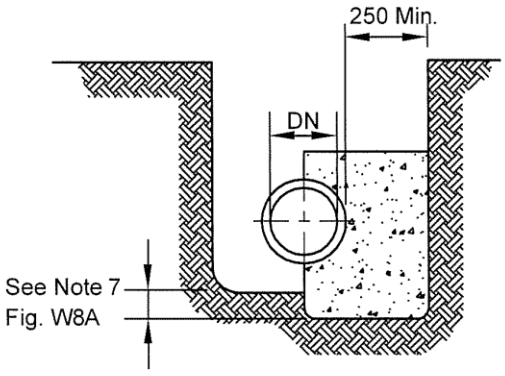

ELEVATION (FOR HORIZONTAL THRUST)

THRUST BLOCK FOR BENDS

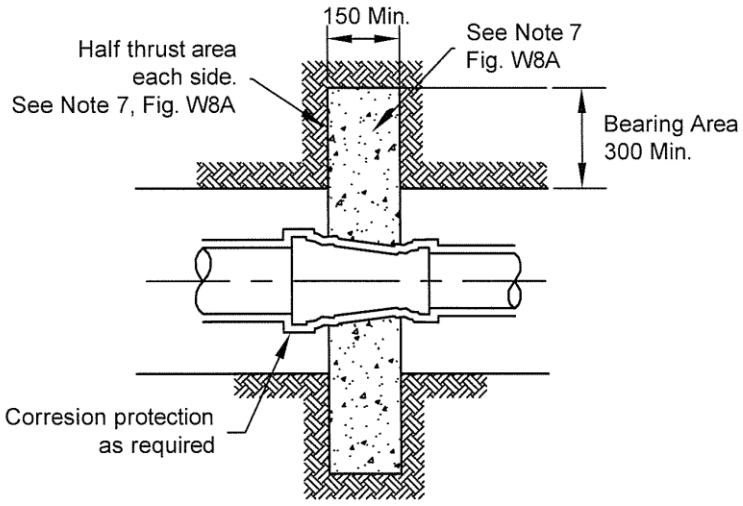

PLAN (FOR HORIZONTAL THRUST)

TAPER THRUST BLOCK

Must be read in conjunction with W8A

Not to scale

Invercargill CITY COUNCIL	**TYPICAL DETAILS THRUST BLOCK INSTALLATION TEES, BENDS AND TAPERS**	Fig. W8 Rev. 3 Date 6/12

Soil Classification and allowable Horizontal bearing pressure or Ground. See Note 3	Tees and Dead Ends			11.25° Horizontal Bends			22.5° Horizontal Bends			45° & 30° Horizontal Bends			90° & 60° Horizontal Bends		
For Horizontal Thrust on Trench Walls where cover over pipes is 450 or greater	Hard Clay Sound Rock	Very Stiff Clay Dense Sand Gravel Decomposed Rock	Stiff Clay Medium Dense Clean Sand	Hard Clay Sound Rock	Very Stiff Clay Dense Sand Gravel Decomposed Rock	Stiff Clay Medium Dense Clean Sand	Hard Clay Sound Rock	Very Stiff Clay Dense Sand Gravel Decomposed Rock	Stiff Clay Medium Dense Clean Sand	Hard Clay Sound Rock	Very Stiff Clay Dense Sand Gravel Decomposed Rock	Stiff Clay Medium Dense Clean Sand	Hard Clay Sound Rock	Very Stiff Clay Dense Sand Gravel Decomposed Rock	Stiff Clay Medium Dense Clean Sand
PBH kPa	50	100	200	50	100	200	50	100	200	50	100	200	50	100	200
100	N	0.12	0.24	N	N	N	N	N	N	N	N	0.18	N	0.17	0.34
150	0.12	0.25	0.50	N	N	N	N	N	0.20	N	0.19	0.38	0.18	0.35	0.70
200	0.21	0.42	0.84	N	N	0.16	N	0.17	0.34	0.16	0.32	0.64	0.30	0.60	1.20
225	0.27	0.53	1.06	N	N	0.22	0.11	0.22	0.42	0.21	0.41	0.81	0.38	0.75	1.52
250	0.32	0.64	1.28	N	0.13	0.26	0.12	0.25	0.50	0.25	0.49	0.98	0.45	0.91	1.80
300	0.47	0.94	1.88	N	0.18	0.36	0.18	0.37	0.74	0.36	0.72	1.44	0.66	1.33	2.66
375	0.72	1.43	2.86	0.14	0.28	0.56	0.28	0.56	1.12	0.55	1.09	2.18	1.01	2.02	4.04
450	0.52	2.02	4.04	0.20	0.79	1.58	0.20	0.79	1.58	0.40	1.55	3.09	0.73	2.86	5.71
500	0.63	2.37	4.93	0.25	0.98	1.93	0.25	0.98	1.93	0.49	1.89	3.78	0.89	3.49	6.98
600	0.89	3.50	6.90	0.35	1.36	2.73	0.35	1.36	2.73	0.68	2.68	5.36	1.27	4.95	9.89
750	1.37	5.36	10.72	0.53	2.10	4.19	0.53	2.10	4.19	1.05	4.10	8.21	1.94	7.58	15.16

Nominal Diameter of Fitting (DN)

MINIMUM THRUST AREA FOR BLOCKS IN SQUARE METRES (M^2)
DESIGN PRESSURE 1000 kPa (NOM. 100 mm HEAD)

'N' Denotes nominal thrust area - (See notes 4 & 5)
PBH - Allowable Horizontal Bearing Pressure

NOTE:

1. All dimensions in millimetres unless otherwise specified.
2. Cast the thrust area of all thrust blocks against a clean face of undisturbed natural soil.
   Thrust blocks not to interfere with other services.
3. Do not use standard thrust blocks as specified in this drawing in:
   - Very soft, soft, or firm clay.
   - Loose clean sand.
   - Uncompacted fill or refuse.
   A geotechnical assessment and individual design is required for these soils.
4. The nominal thrust area 'N' to be achieved by pouring concrete the full length of the fitting and to a depth that ensures the thrust is vertically and horizontally centred on the resulting thrust block. See also note 7.
5. Design pressures other than 1000 kPa reduce or increase the minimum thrust area by the ratio of the design pressures except where:
   - Minimum thrust area is <0.1m^2, and
   - 'N' appears in the table and design pressure is above 1000 kPa.
   Calculate the area.
6. Finish thrust blocks approximately 100 above the top of the fitting or bearing pad and extend to the floor of the trench or deeper if necessary to achieve the required thrust area, maximum encasement to be 180°.
7. The minimum thrust area for taper thrust blocks to be equal to the difference between the thrust areas for dead ends of equivalent diameter to those each side of taper.
8. For downward vertical thrust, the allowable bearing pressures for various soils may be taken as twice that for horizontal thrust shown.
9. When pouring concrete against fittings place a membrane of polyethylene, PVC or Felt between the fitting and concrete to prevent damage to the fitting. Joints to be clear of concrete.
10. Concrete to be kept clear of bolts and flanges or gibault joints to allow fittings to be removed without interfering with anchor block.

Invercargill CITY COUNCIL	**TYPICAL DETAILS THRUST BLOCK INSTALLATION TEES, BENDS AND TAPERS - TABLE**	Fig. W8A Rev. 2 Date 2/12

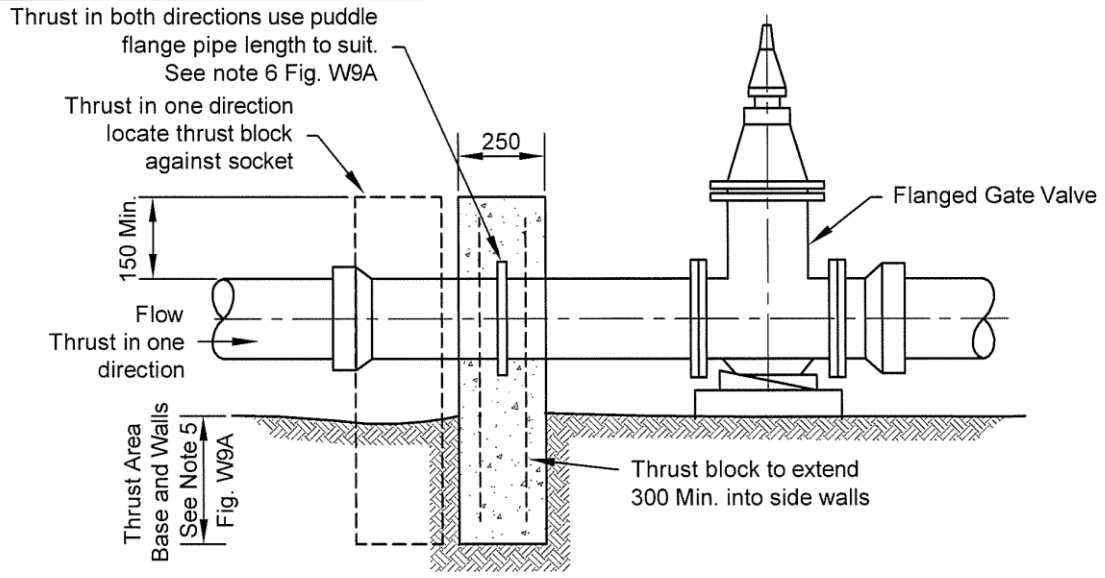

FLANGED VALVES

Notes:

1. Unsealed surfaces. Backfill to surface with specified material and ram hard.
2. Lean-mix concrete to be 10 parts aggregate to 1 part cement to be placed fairly dry and rammed hard.
3. uPVC pipe to be 250 mm dia. for 100mm dia and 200mm dia. valves and 313mm dia. for 150mm dia and 250mm dia. valves.
4. Valve to AS / NZS 2638:1999

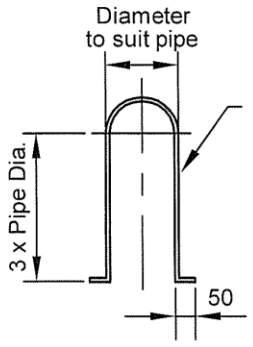

TYPICAL SS STRAP

Must be read in conjunction with W9A

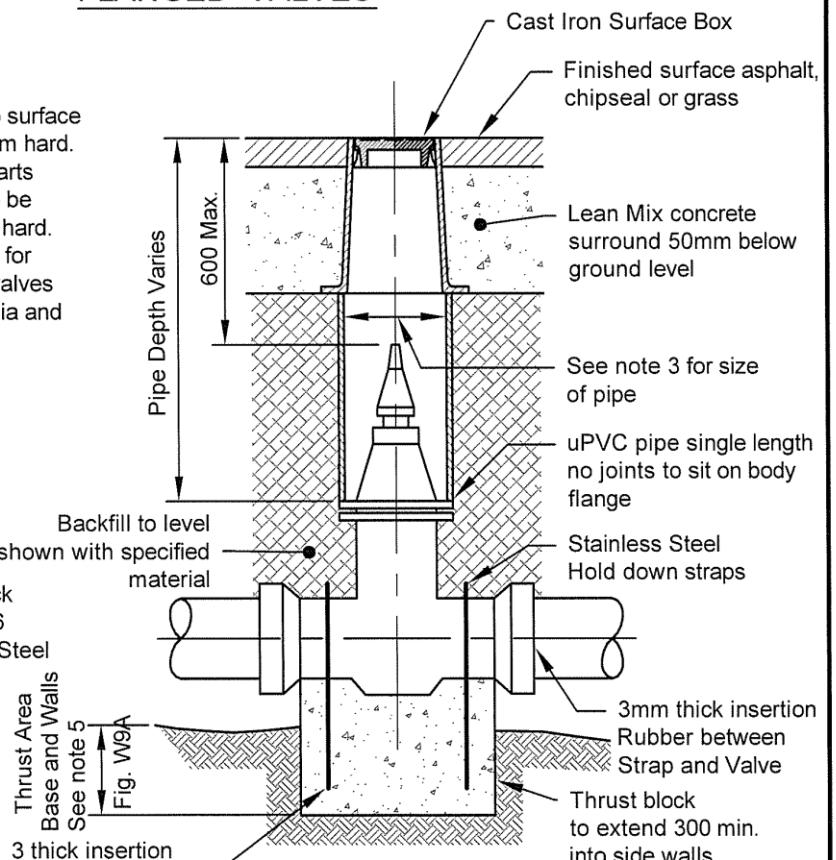

SOCKETED VALVES

Not to scale

Invercargill CITY COUNCIL	TYPICAL DETAILS THRUST BLOCK INSTALLATION GATE VALVES AND VERTICAL BENDS	Fig. W9 Rev. 3 Date 6/12

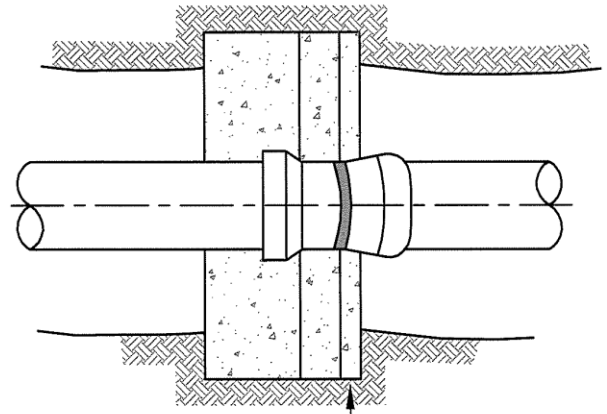

PLAN

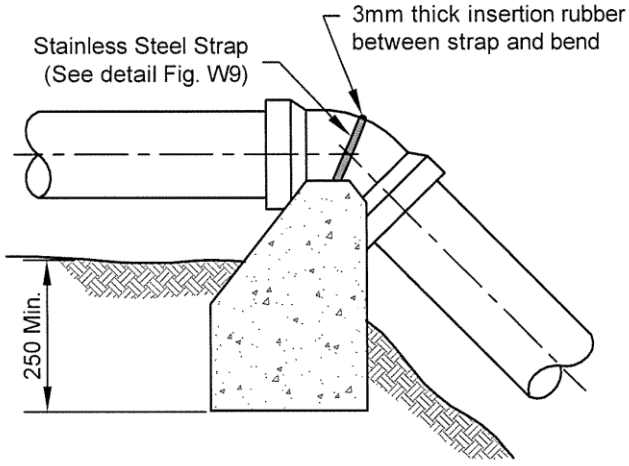

ELEVATION
VETRTICAL BENDS

Minimum Block Volume for Anchorage			
Vertical Bends (For test pressure of 1000 kPa - see note 2)			
Pipe Dia.	Concrete Volume m³		
	11.25° Bend	22.5° Bend	45° Bend
100	N	N	0.3
150	N	0.3	0.6
200	0.2	0.5	1.1
225	0.3	0.6	1.4
250	0.3	0.7	2.5
300	0.4	1.1	3.8
375	0.7	1.8	5.8
450	Detailed design required (Alternative methods to be considered)		
500			
600			
750			

'N' - No additional restraint required
(Compacted Trenchfill sufficient)

ANCHOR BLOCK CONTRUCTION NOTES:

- Locate anchor block centrally around bend.
- Key anchor block into base of trench a minimum depth of 250.
- Pour concrete against a solid excavation face.
- Use grade 17.5MPa concrete.
- Keep concrete clear of all bolts, nuts and pipe joints.

Note:

1. All dimensions in millimetres, unless shown otherwise.
2. Anchor blocks in the table are designed for a test pressure of 1000 kPa (100m head) adjust concrete volume to suit actual test pressure.
3. Where DI pipe and fittings with restrained joints are used thrust blocks are not required.
4. Thrust block reinforcement as specified in design drawings.
5. Where specified provide concrete thrust blocks for soc-soc valves, thrust are to be for dead ends as shown in W8
6. Install puddle flanges on class K12 DICL pipe.

Not to scale

Invercargill CITY COUNCIL	**TYPICAL DETAILS THRUST BLOCK INSTALLATION GATE VALVES AND VERTICAL BENDS**	Fig. W9A Rev. 2 Date 2/12

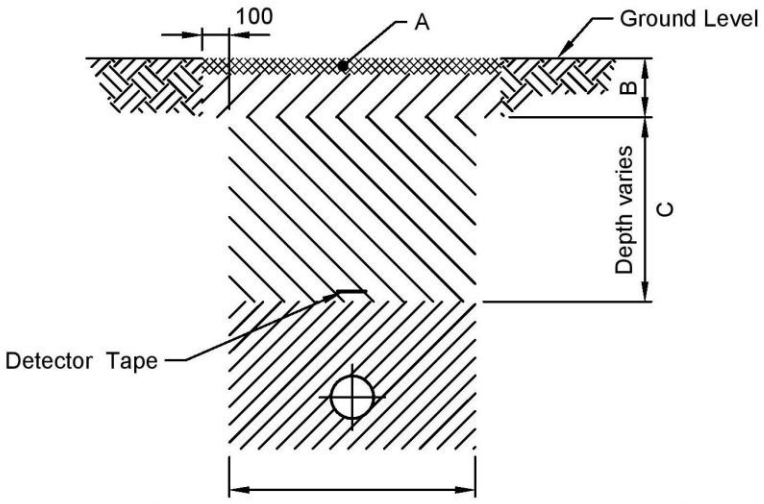

Trench Width as per NZS 4404:2010 Appendix B CM-001 to CM-002

Location	A	B	C
Carriageway Trench	50mm Asphalt on crushed AP 40 basecourse pavement	200	AP 65 Basecourse
Vehicular Crossing / Footpath	30mm Asphalt on crushed AP 40 basecourse pavement	150	AP 65 Basecourse
Grass Berm	Compacted screened top soil or cut turfs ex. berm	75	Compacted excavated material

Not to scale

Invercargill CITY COUNCIL	**TYPICAL TRENCH DETAIL OF BACKFILLING REQUIREMENT**	Fig. W10 Rev. 4 Date 4/16

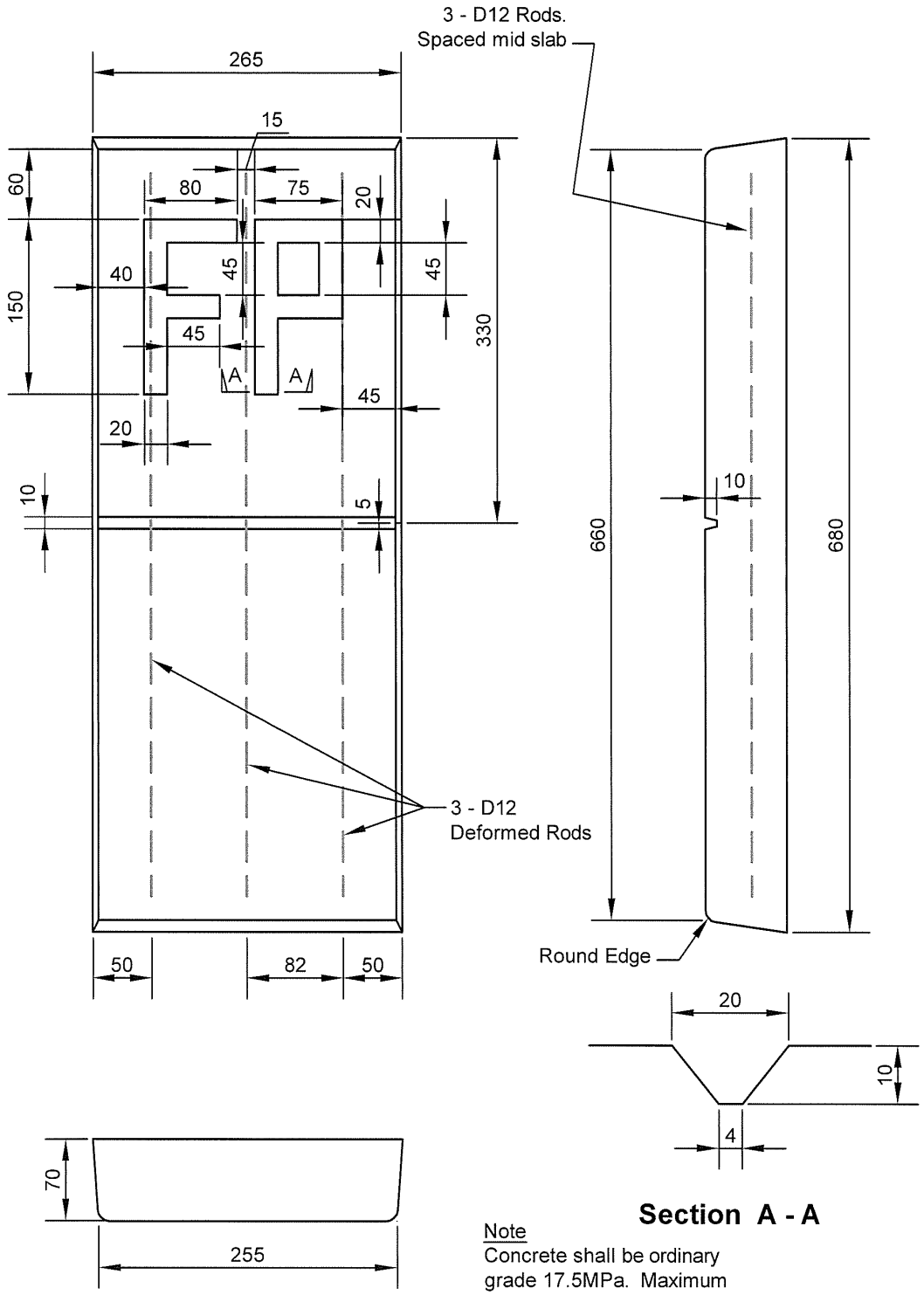

Note
Concrete shall be ordinary grade 17.5MPa. Maximum aggregate size 19mm to N.Z.S. 3104

Not to scale

Invercargill CITY COUNCIL	**FIRE HYDRANT** **CONCRETE INDICATOR POST**	Fig. W11 Rev. 2 Date 3/08

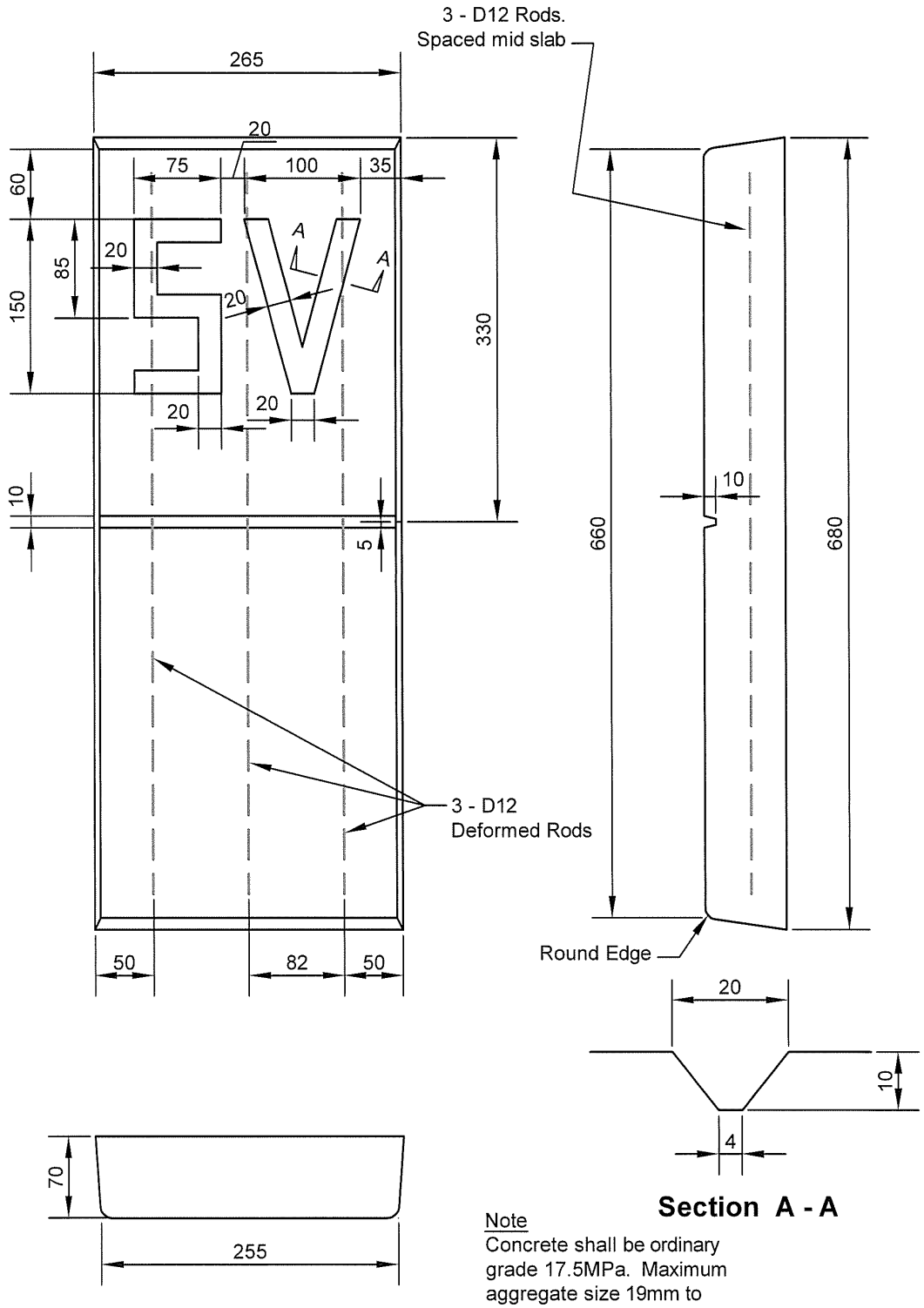

Note
Concrete shall be ordinary grade 17.5MPa. Maximum aggregate size 19mm to N.Z.S. 3104

Not to scale

Invercargill CITY COUNCIL	SCOUR VALVE CONCRETE INDICATOR POST	Fig. W12 Rev. 2 Date 3/08

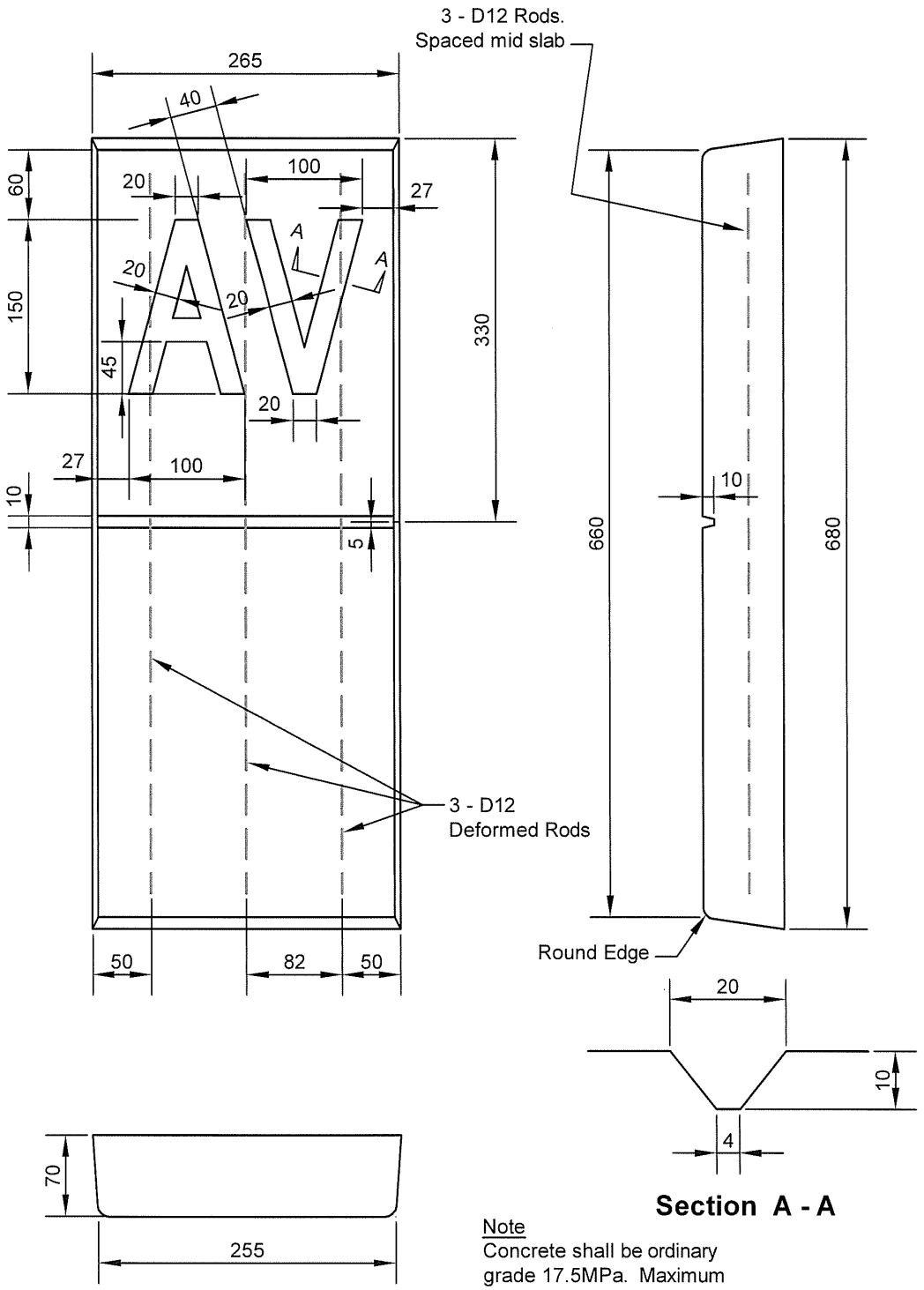

Note
Concrete shall be ordinary grade 17.5MPa. Maximum aggregate size 19mm to N.Z.S. 3104

Not to scale

Invercargill CITY COUNCIL	AIR VALVE CONCRETE INDICATOR POST	Fig. W13 Rev. 2 Date 3/08

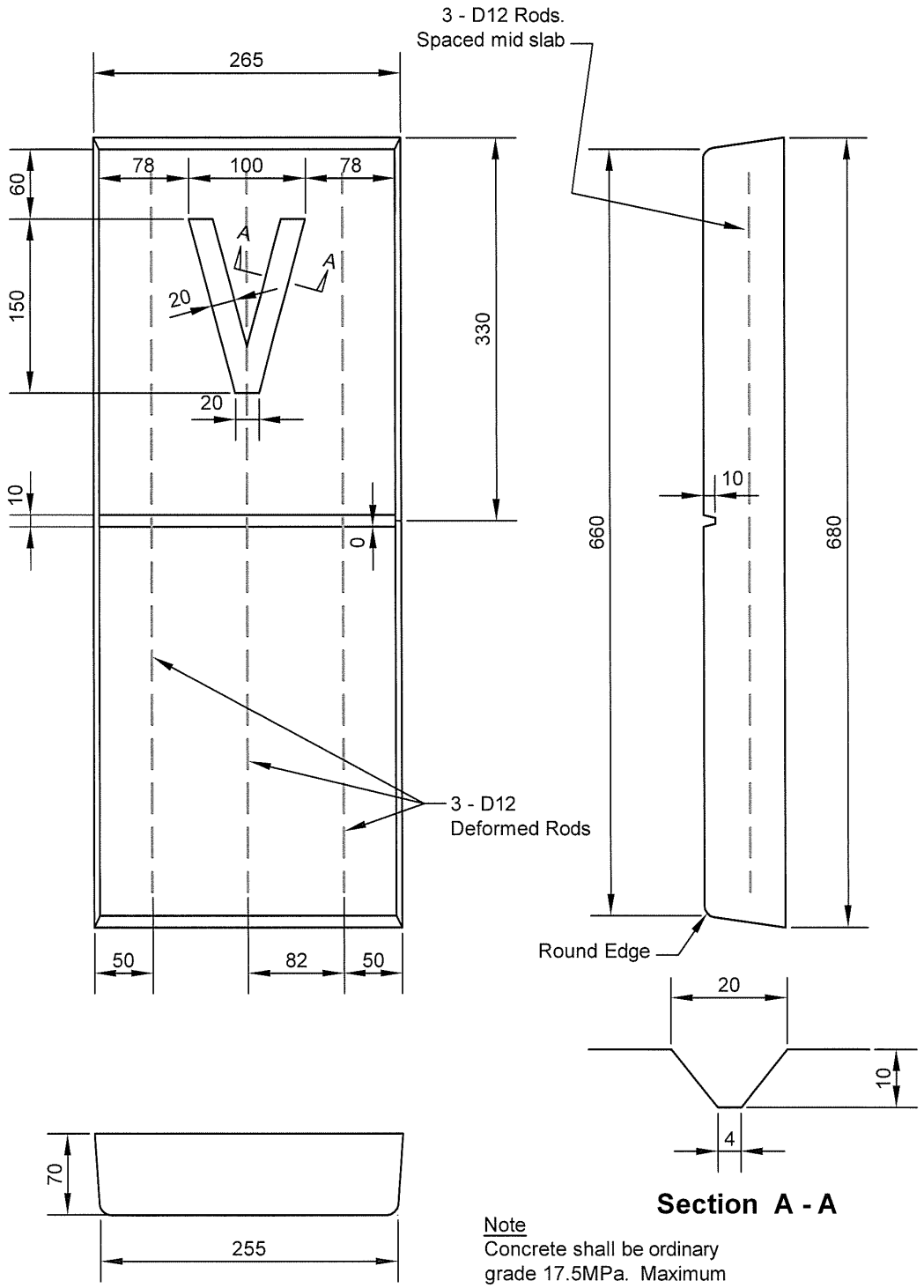

Note
Concrete shall be ordinary grade 17.5MPa. Maximum aggregate size 19mm to N.Z.S. 3104

Not to scale

Invercargill CITY COUNCIL	VALVE CONCRETE INDICATOR POST	Fig. W14 Rev. 2 Date 3/08

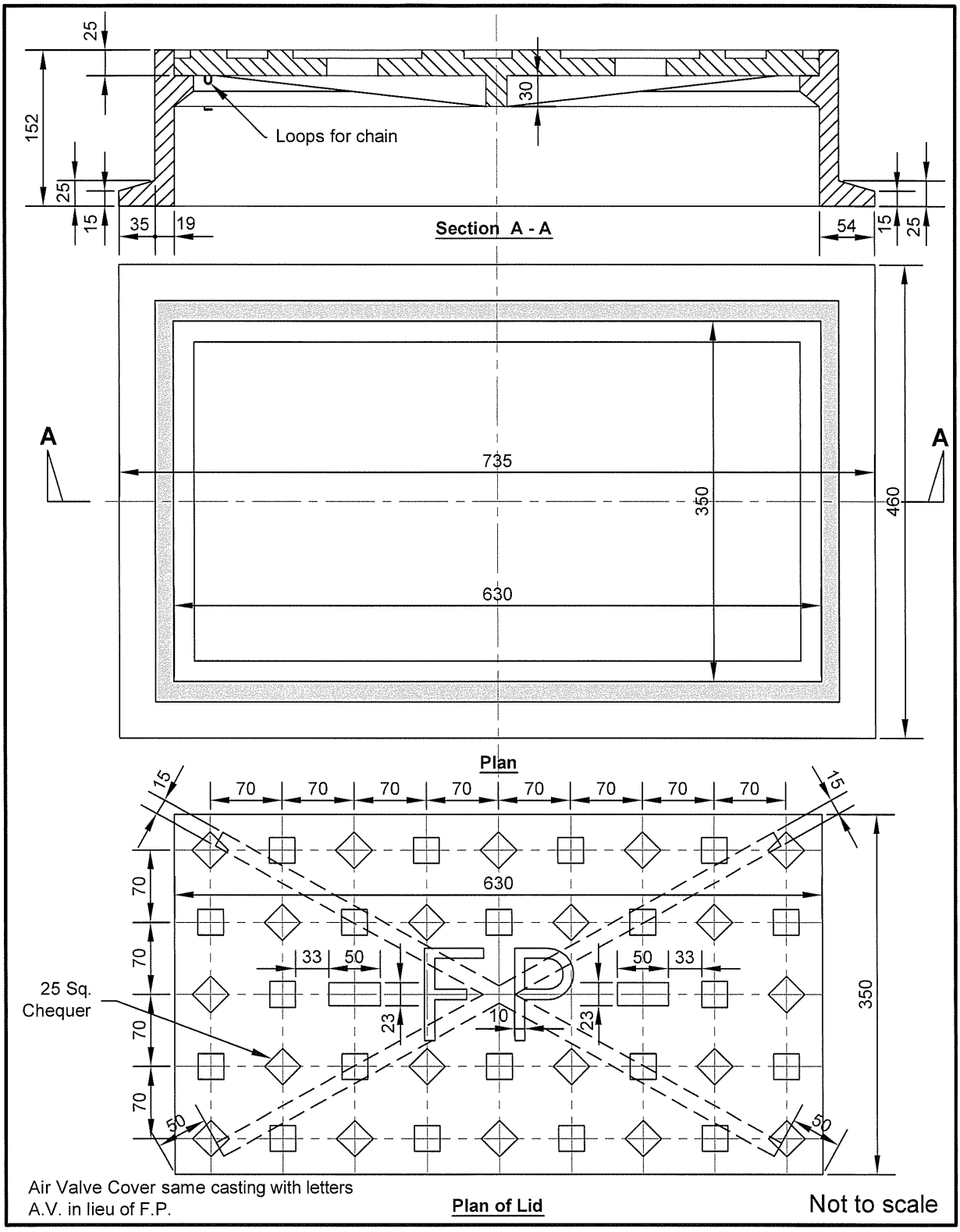

Invercargill CITY COUNCIL	**SURFACE BOX FOR DOUBLE SPINDLE HYDRANT - LID**	Fig. W16A Rev. 1 Date 5/11

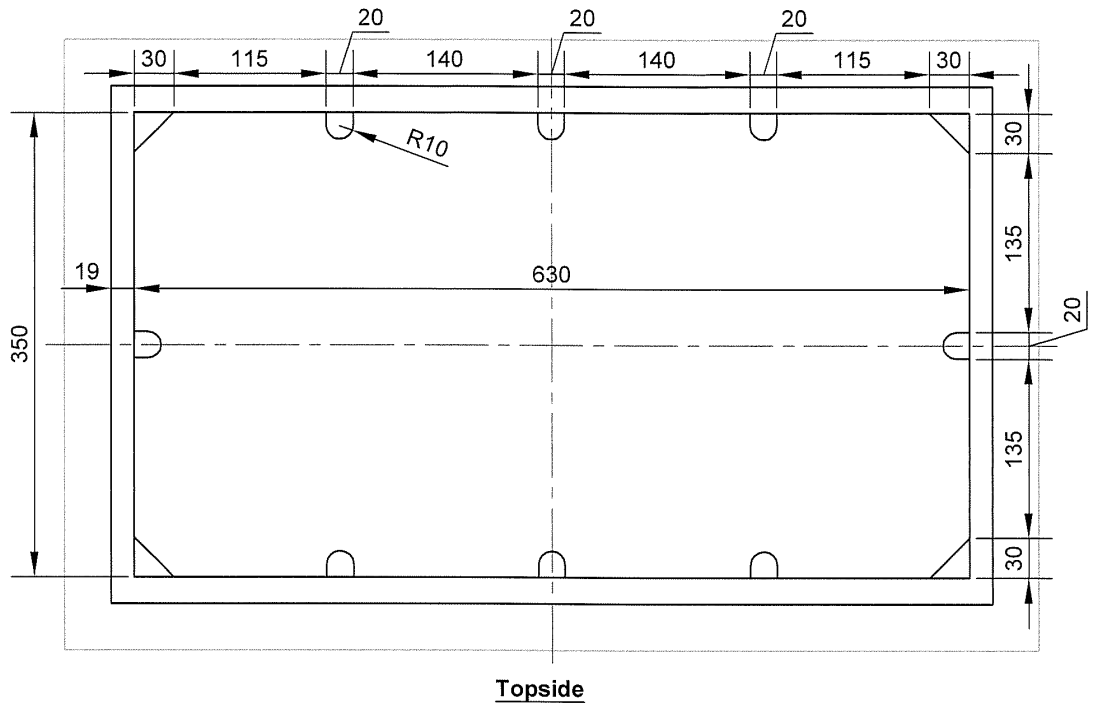

Topside

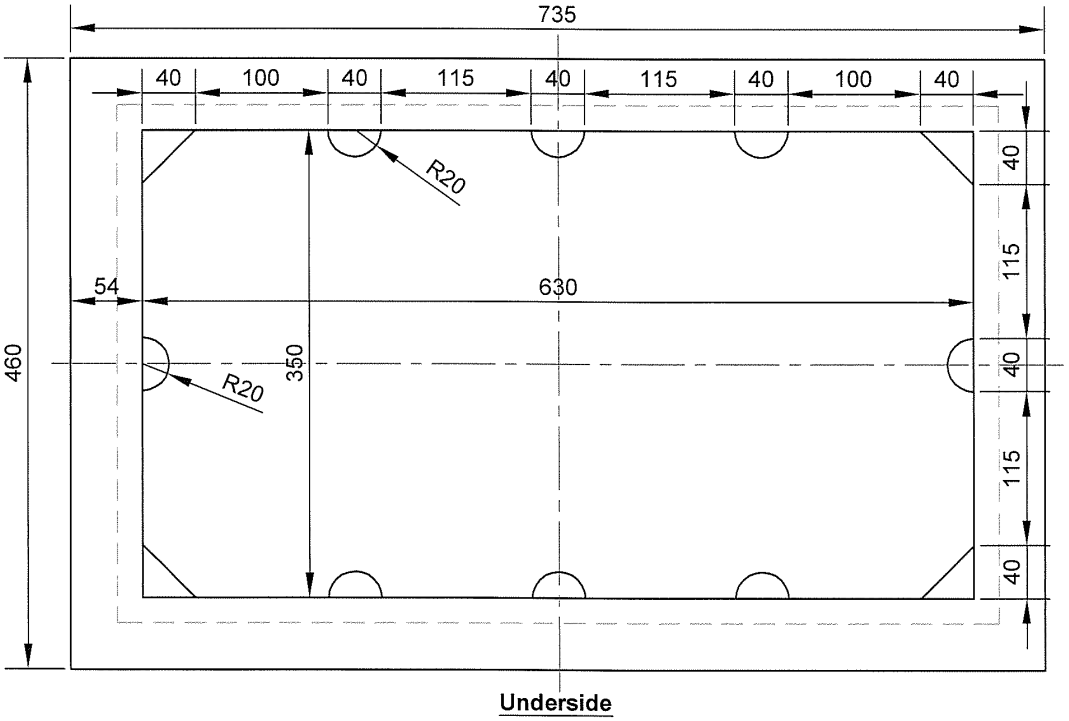

Underside

Not to scale

Invercargill CITY COUNCIL	**SURFACE BOX FOR DOUBLE SPINDLE HYDRANT - FRAME**	Fig. W16B Rev. 1 Date 5/11

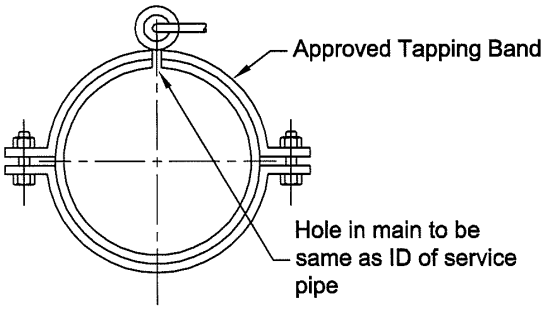

Section

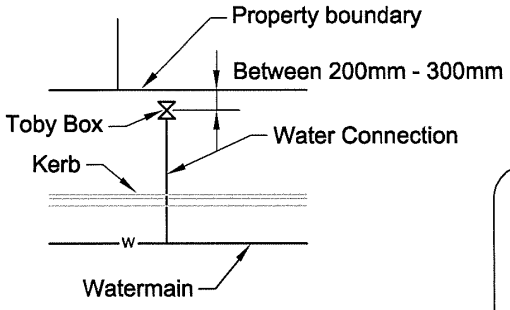

Water Connection Plan

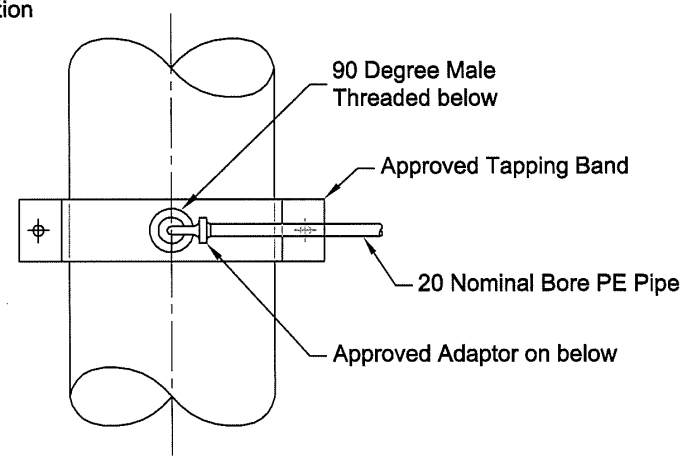

Plan

Standard Tapping Methods

Notes:

1. All dimensions in millimetres.
2. Stop cocks shall be:

   (a) For 20mm nominal bore "Acuflow Diaphragm"
   (b) For diameter greater then 20mm to be in accordance with AS 1628:1977 or BS 5154 series 1983. Be de-zinc, friction rated with non-rising stem, bronze "T" bar or cast iron hand wheel, female threaded both ends to BS (ISO 7) Taper
   (c) A 500mm length of pipe terminating beyond the boundary plugged at the blank end shall be connected to the stop cock.

3. Use proprietary in line metal valves approved by ICC when main is tapped under pressure
4. Cover over the connection pipe shall be not less than 300mm at the kerbline and 300mm - 375mm below footpath formation level at the boundary.

Not to scale

Invercargill CITY COUNCIL	**Property Services** **Connection to Main**	Fig. W17 Rev. 2 Date 2/13

18. **APPENDIX C Field Testing of Pipelines**

No changes to appendix

19. **APPENDIX D Water Supply Disinfection Specification**

No changes to appendix

20. **APPENDIX E Typical Plan and Cross Section Figures from Table 3.2**

No changes to appendix