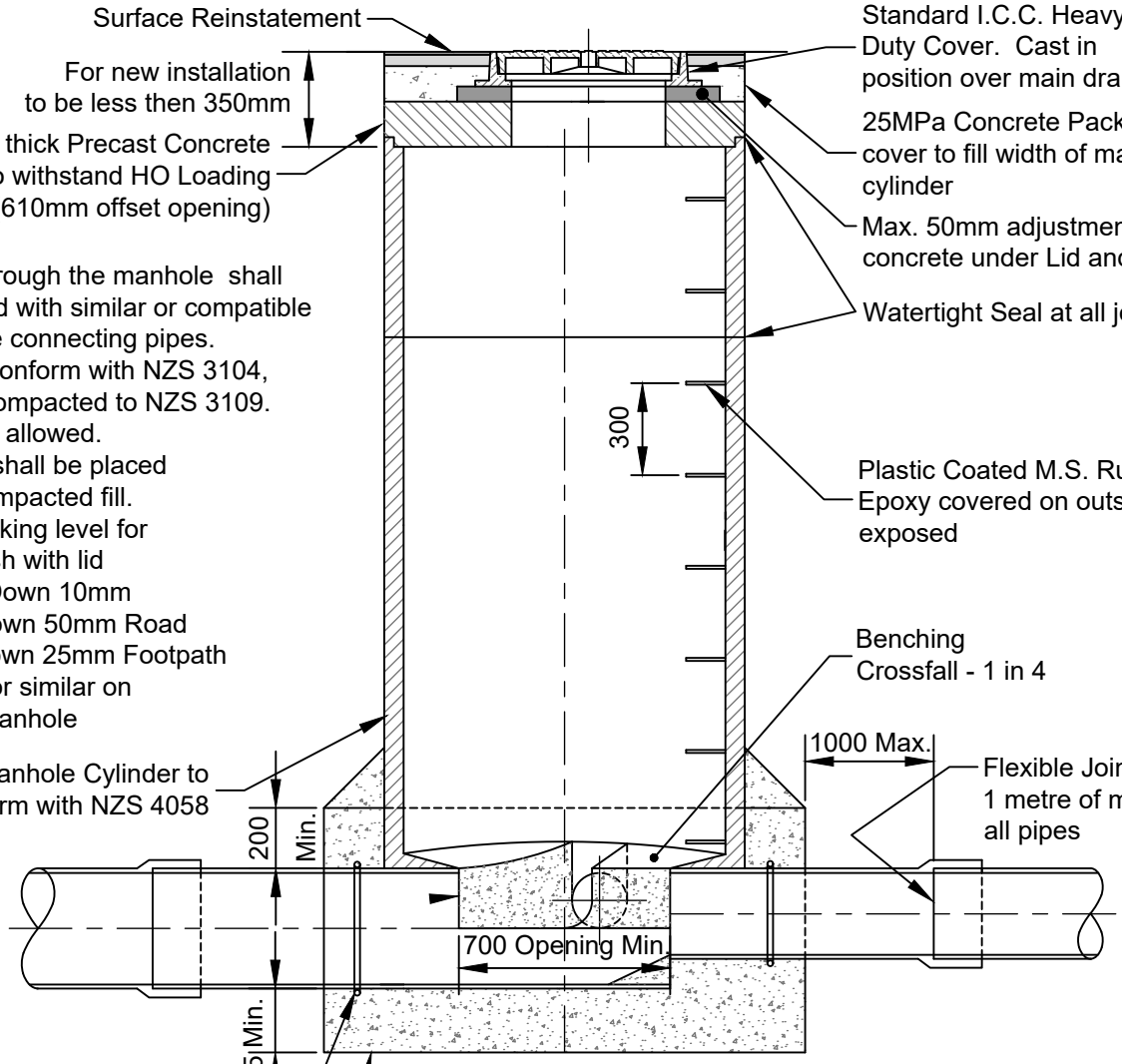

Notes

1. Pipe invert through the manhole shall be constructed with similar or compatible material to the connecting pipes.
2. Concrete to conform with NZS 3104, placed and compacted to NZS 3109. No plastering allowed.
3. No concrete shall be placed against uncompacted fill.
4. Concrete packing level for
   Grass - Flush with lid
   Chipseal - Down 10mm
   Asphalt - Down 50mm Road
   Down 25mm Footpath
5. Gas tight lid or similar on Foul Sewer manhole

Section A - A

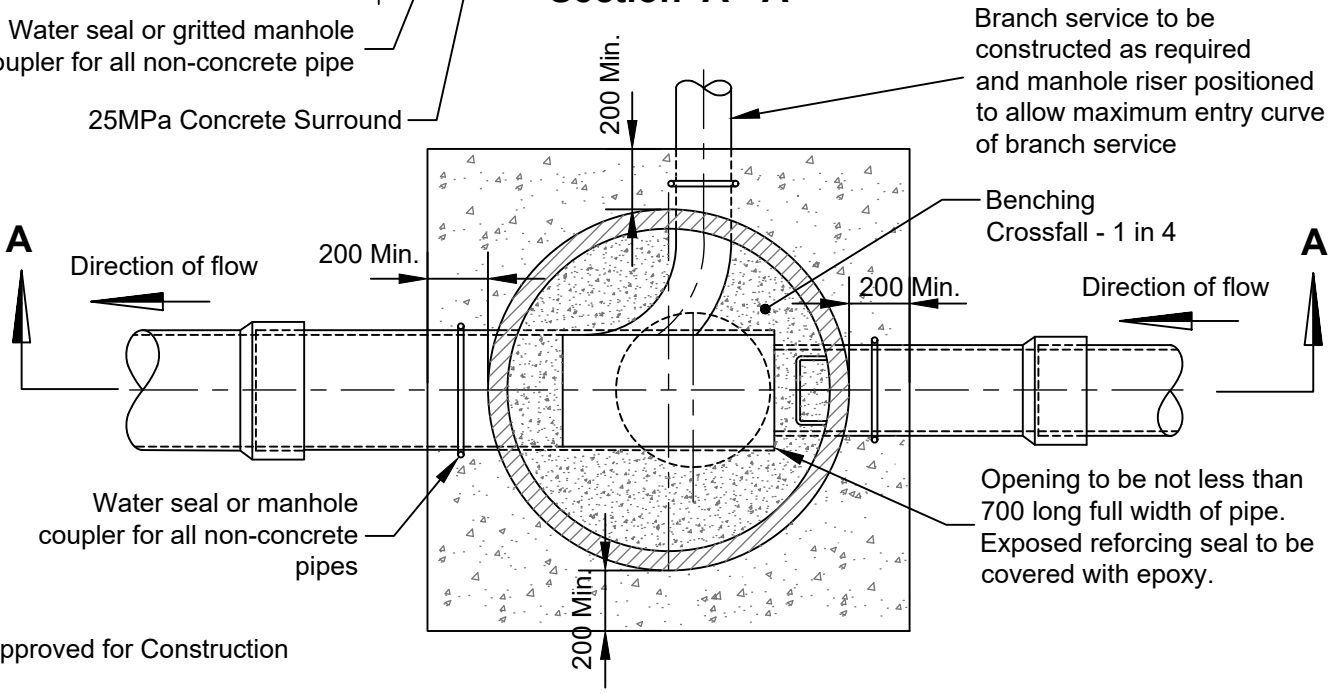

Approved for Construction

Not to scale

Invercargill City Council	**STANDARD CONCRETE MANHOLE WITH REDUCING DIAMETER MAIN Ø150 TO Ø600 MAINS**	Southland District Council	Fig. D16 Rev. 5 Date 03/23